BLOCK 33 LOT 2
IN OR 2030/1868
CITY OF FDNA BEACH

SCALIES ANTHONY
310 N 5TH STREET
FERNANDINA BEACH, FL 32034

2024

00-00-31-1800-0033-0020

BUILDING CHARACTERISTICS

ELEMENT	CD	CONSTRUCTION
Exterior Wall	10	ABOVE AVG 100
Roof Structur	03	GABLE/HIP 100
Roof Cover	03	COMP SHNGL 100
Interior Wall	03	PLASTER 100
Interior Floo	12	HARDWOOD 100
Air Condition	03	CENTRAL 100
Heating Type	04	AIR DUCTED 100
Bedrooms		3 100
Bathrooms		1 100
Frame	02	WOOD FRAME 100
Stories	2.	2. 100
Units		0 100
BUD8 Adjustme	02	DIST FB 100
Occupancy	00	NONE 100
Quality	04	Quality Level 04

DOR CODE 0100 SINGLE FAMILY
MAP NUM | MKT AREA 01
NEIGHBORHOOD/LOC 1005.00

AREA TYPE	TOTAL GROSS AREA	PCT OF BASE	TOT ADJ AREA	SUBAREA MARKET VALUE
BAS	952	100	952	181,842
DCK	76	10	8	1,528
FOP	256	30	77	14,708
FUS	952	100	952	181,842
STP	30	10	3	572
STR	21	10	2	382
UOP	256	20	51	9,742
TOTALS	2,543		2,045	390,618

MARKET ADJUSTMENTS

TYPE	MDL	EFF. AREA	TOT ADJ PTS	EFF. BASE RATE	REPL. COST NEW	AYB	EYB	ECON	FNCT	PD	NORM	% COND
0900	01	2,045	113.1900	141.49	289,347	1910	1910	0	0	135	35.25	135.00

1 SNGL FAM – 100% - 2018 Heated Area: 1904 HX Base Yr 2018

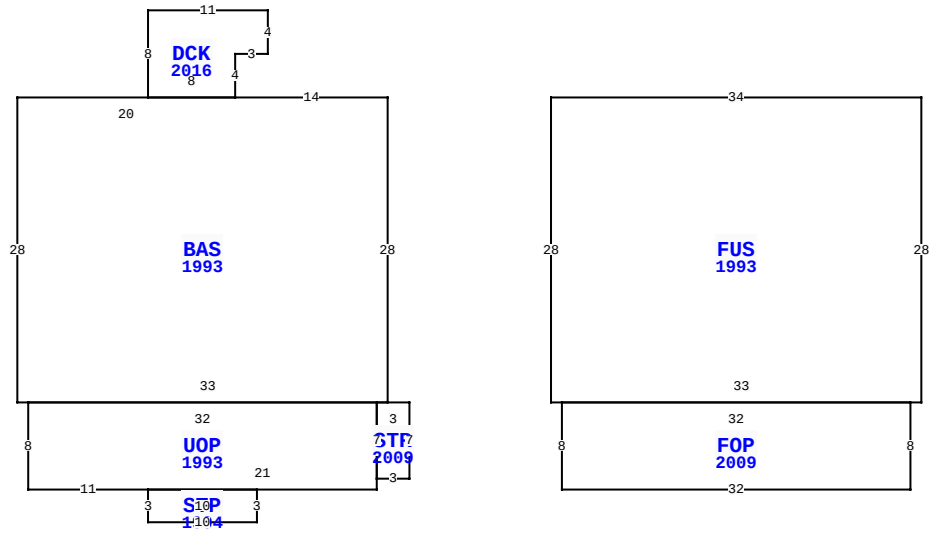

310 N 5TH ST, FERNANDINA BEACH

BLD DATE		LGL DATE	
XF DATE		LAND DATE	
INC DATE		AG DATE	

NASSAU COUNTY PROPERTY

PAGE 1 of 1 2

VALUATION SUMMARY

VALUATION BY		STANDARD
Tax Group: 2	Tax Dist:	
BUILDING MARKET VALUE		390,618
TOTAL MARKET OB/XF VALUE		1,820
TOTAL LAND VALUE - MARKET		200,000
TOTAL MARKET VALUE		592,438
SOH/AGL Deduction		217,249
ASSESSED VALUE		375,189
TOTAL EXEMPTION VALUE	HX HB	50,000
BASE TAXABLE VALUE		325,189
TOTAL JUST VALUE		592,438
NCON VALUE		0
INCOME VALUE		
PREVIOUS YEAR MKT VALUE		572,910

PERMIT NUM	DESCRIPTION	AMT	ISSUED
20081118	NEW TRIM & SIDING	16,500	07/07/2008
20081014	ADD 2ND STORY POR	9,600	06/12/2008
20034112	REROOF	4,000	11/07/2003
2001356	REMODEL	27,000	06/13/2001
20011223	DEMOLITION	3,000	05/30/2001
19972258	REMODEL	25,000	11/14/1997

SALES DATA

OFF RECORD Number	DATE	TYPE INST	Q U	V I	RSN CD	SALE PRICE
2030/1868	2/26/2016	WD	Q	I	02	410,000
GRANTOR: DAVIES KIM						
GRANTEE: SCALIES ANTHONY						
1922/1954	6/16/2014	CT	U	I	18	100,300
GRANTOR: CLERK OF COURT						
GRANTEE: DAVIES KIM						

BUILDING NOTES

BUILDING DIMENSIONS

BAS=[YR=1993] W14 DCK=[YR=2016] N4 E3 N4 W11 S8 E8$ W20 S28 E1 UOP=[YR=1993] S8 E11 STP=[YR=1994] S3 E10 N3 W10$ E21 N1 STR=[YR=2009] E3N7W3S7$N7W32$ E33N28$PTR=E15 FUS=[YR=1993] S28E1 FOP=[YR=2009] S8E32N8W32$E33N28W34$ W15$.

EXTRA FEATURES

LN	OB/XF CODE	DESCRIPTION	BLD	CAP	L	W	UNITS	UT	Adj R	ADJ UNIT PRICE	ORIG COND	YEAR ON	YEAR ACTUAL	Q	% COND	OB/XF MKT VALUE	NOTES
1	0504	FP-ELECTRI	0	100	0	0	1.00	UT	1,000.00	1,000.00	100	1910	1910	3	20	200	
2	0855	CONC PAVER	0	100	0	0	178.00	SF	10.00	10.00	100	2010	2010	3	91	1,620	

LAND DESCRIPTION

TOTAL OB/XF 1,820

LN	USE CODE	CLS	LAND USE DESCRIPTION	CAP	RD	LOC ZONE	FRONT	DEPTH	TOT LND UTS	UNIT TYPE	DT	DPTH FACT	% COND	TOT ADJ	UNIT PRICE	ADJ UNIT PRICE	LAND VALUE	OTHER ADJUSTMENTS AND NOTES	YEAR	DENSITY	DECL	FRZ	YR	CONSRV
1	000100	C	SFR	100	0006	R-2	50.00	100.00	50.00	FF		1.00	1.00	1.00	4,000.00	4,000.00	200,000							

REVIEW DATE 05/12/2019 BY KBA Total Acres: 0.00 Total Land Value: 200,000 Market: 0 Agricultural: 0 Common: 200,000 PRINTED 08/06/2024 BY SYS