BLOCK 29 LOT 12 13 14 15
IN OR 1855/1697
ESMT OR 1463/723

LOS ARRAYANES INC
530 CENTRE ST
FERNANDINA BEACH, FL 32034

2024

00-00-31-1800-0029-0120

NASSAU COUNTY PROPERTY

BUILDING CHARACTERISTICS

ELEMENT	CD	CONSTRUCTION
Exterior Wall	23	REINF CONC 70
Exterior Wall	28	GLASS THRM 30
Roof Structur	09	RIDGE FRME 100
Roof Cover	04	BUILT-UP 100
Interior Wall	05	DRYWALL 70
Interior Wall	06	CUST PANEL 30
Interior Floo	03	CONC FINSH 100
Ceiling	01	FIN.SUSPD 100
Air Condition	04	ROOF TOP 100
Heating Type	04	AIR DUCTED 100
Fixtures		28 100
Frame	05	STEEL 100
Story Height		15 100
RMS		8 100
Stories	1.	1. 100
Units		0 100
BUD8 Adjustme	02	DIST FB 100
Occupancy	00	NONE 100
Quality	03	Quality Level 03
DOR CODE	2100	RESTAURANTS/CAFE
MAP NUM		MKT AREA 01
NEIGHBORHOOD/LOC	1002.00	

AREA TYPE	TOTAL GROSS AREA	PCT OF BASE	TOT ADJ AREA	SUBAREA MARKET VALUE
BAS	70	100	70	8,467
BAS	125	100	125	15,120
BAS	931	100	931	112,611
BAS	2,537	100	2,537	306,869
BAS	682	100	682	82,493
BAS	2,108	100	2,108	254,978
CAN	687	30	206	24,917
FST	42	50	21	2,540
PTO	38	5	2	242
UOP	180	20	36	4,354
TOTALS	8,777		6,994	845,977

MARKET ADJUSTMENTS

TYPE	MDL	EFF. AREA	TOT ADJ PTS	EFF. BASE RATE	REPL. COST NEW	AYB	EYB	ECON	FNCT		NORM	% COND
2101	04	6,994	118.0210	203.29	1,421,810	1973	1990	0	0	0	40.50	59.50

1 RSTARANT 1 – 0% - 0 Heated Area: 6453 HX Base Yr

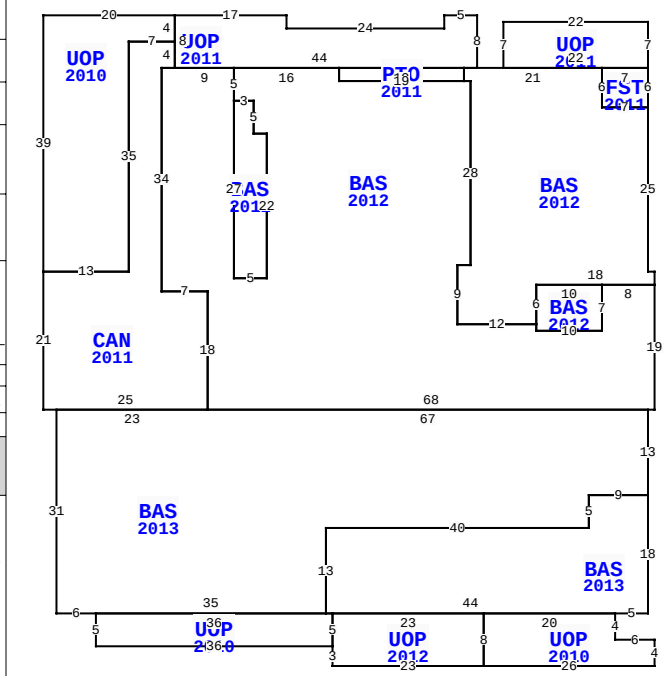

** This building has 15 Sub-Areas

520 CENTRE ST, FERNANDINA BEACH

BLD DATE	12/30/2021 KK	LGL DATE	
XF DATE		LAND DATE	
INC DATE		AG DATE	

NASSAU COUNTY PROPERTY — VALUATION SUMMARY

VALUATION BY	STANDARD
Tax Group: 2	Tax Dist:
BUILDING MARKET VALUE	871,842
TOTAL MARKET OB/XF VALUE	59,108
TOTAL LAND VALUE - MARKET	1,250,000
TOTAL MARKET VALUE	2,180,950
SOH/AGL Deduction	546,358
ASSESSED VALUE	1,634,592
TOTAL EXEMPTION VALUE	0
BASE TAXABLE VALUE	1,634,592
TOTAL JUST VALUE	2,180,950
NCON VALUE	26,797
INCOME VALUE	
PREVIOUS YEAR MKT VALUE	2,216,357

PERMIT NUM	DESCRIPTION	AMT	ISSUED
20210224	XFOB	180,000	11/02/2021
20130084	ELEC OTHER	250	01/11/2013
20120757	INSTL RANGE HOOD	20,500	05/01/2012
20120656	RANGE HOOD SPRKLR	1,500	04/16/2012
20120621	INSTL ADDL BEAMS	5,000	04/11/2012
20120592	MODIFY FIRE SPRIN	4,100	04/10/2012

SALES DATA

OFF RECORD Number	DATE	TYPE INST	Q / U	V / I	RSN CD	SALE PRICE
1855/1697	4/26/2013	WD	Q	I	01	2,065,200
GRANTOR: 520-530 CENTRE STREET						
GRANTEE: LOS ARRAYANES INC						
1830/1265	12/19/2012	WD	U	I	11	100
GRANTOR: SHAW DONALD M						
GRANTEE: 520-530 CENTRE STRE						

BUILDING NOTES

BUILDING DIMENSIONS

BAS=[YR=2012] S27 E5 N22 W2 N5 W3 $ BAS=[YR=2012] N5 W9 CAN=[YR=2011] N4 UOP=[YR=2010] N4 W20 S39 E13 N35 E7 $ W7 S35 W13 S21 E25 N18 W7 N34 E2 $ W2 S34 E7 S18 BAS=[YR=2013] W23 S31 E6 UOP=[YR=2010] S5 E36 UOP=[YR=2012] S3 E23 UOP=[YR=2010] E26 N4 W6 N4 BAS=[YR=2013] E5 N18 W9 S5 W40 S13 E44$ W20 S8$ N8 W23 S5$ N5 W36$ E35 N13 E40 N5 E9 N13 W67$ E68 N19 BAS=[YR=2012] N2 W1 N25 FST=[YR=2011] N6 UOP=[YR=2011] N7 W22 S7 E22$ W7 S6 E7$ W7 N6 W21 S2 E1 S28 W2 S9 E12 BAS=[YR=2012] S1 E10 N7 W10 S6$ N6 E18$ W8 S7 W10 N1 W12 N9 E2 N28 W1 PTO=[YR=2011] N2 UOP=[YR=2011] E2 N8 W5 S2 W24 N2 W17 S8 E44$ W19 S2 E19$ W19 N2 W16 S5 E3 S5 E2 S22 W5 N27$.

EXTRA FEATURES

LN	OB/XF CODE	DESCRIPTION	BLD	CAP	L	W	UNITS	UT	Adj R	ADJ UNIT PRICE	ORIG COND	YEAR ON	YEAR ACTUAL	Q	% COND	OB/XF MKT VALUE	NOTES
1	0810	CONCRETE A	0	0	93	5	465.00	SF	6.50	6.50	100	2010	2010	3	91	2,750	
2	0810	CONCRETE A	0	0	0	0	119.00	SF	6.50	6.50	100	2010	2010	3	91	704	
3	0966	FIRE SPRNK	0	0	90	31	2,790.00	SF	3.00	3.00	100	2010	2010	3	91	7,617	
4	0383	FREEZER	0	0	0	0	26.00	SF	105.00	105.00	100	2011	2011	3	68	1,856	
5	0381	COOLER	0	0	9	7	63.00	SF	82.50	82.50	100	2011	2011	3	68	3,534	
6	0964	HALON SYST	0	0	17	4	68.00	SF	50.00	50.00	100	2011	2011	3	92	3,128	
7	0803	ASPHALT C	0	0	0	0	8,361.00	SF	2.00	2.00	100	2011	2011	3	68	11,371	
8	0402	CONC BUMPE	0	0	0	0	25.00	UT	25.00	25.00	100	2011	2011	3	94	588	
9	0446	BOX FNC 6'	0	0	0	0	49.00	LF	20.00	20.00	100	2011	2011	3	50	490	
10	0463	FENCE GATE	0	0	0	0	1.00	UT	300.00	300.00	100	2011	2011	3	81	243	

TOTAL OB/XF 32,281

LAND DESCRIPTION

LN	USE CODE	CLS	LAND USE DESCRIPTION	CAP	RD	LOC ZONE	FRONT	DEPTH	TOT LND UTS	UNIT TYPE	DT	DPTH FACT	% COND	TOT ADJ	UNIT PRICE	ADJ UNIT PRICE	LAND VALUE	OTHER ADJUSTMENTS AND NOTES	YEAR	DENSITY	DECL	FRZ	YR	CONSRV
1	002100	C	RESTAURANT	0	0003	C-3	100.00	200.00	10,000.00	SF		1.00	1.00	1.00	75.00	75.00	750,000							
2	002800	C	PARKNG LOT	0		C-3	0.00	0.00	10,000.00	SF		1.00	1.00	1.00	50.00	50.00	500,000							

REVIEW DATE 07/25/2023 BY HS Total Acres: 0.00 Total Land Value: 1,250,000 Market: 0 Agricultural: 0 Common: 1,250,000 PRINTED 08/06/2024 BY SYS

BLOCK 29 LOT 12 13 14 15
IN OR 1855/1697
ESMT OR 1463/723

LOS ARRAYANES INC
530 CENTRE ST
FERNANDINA BEACH, FL 32034

2024

00-00-31-1800-0029-0120

BUILDING CHARACTERISTICS

ELEMENT	CD	CONSTRUCTION
Exterior Wall	15	CONC BLOCK 100
Roof Structur	09	RIDGE FRME 100
Roof Cover	04	BUILT-UP 100
Interior Wall	01	MINIMUM 100
Interior Floo	03	CONC FINSH 100
Ceiling	03	PART.FIN. 100
Air Condition	03	CENTRAL 100
Heating Type	03	FORCED AIR 100
Frame	03	MASONRY 100
Story Height		11 100
Quality	04	Quality Level 04
DOR CODE	2100	RESTAURANTS/CAFE

MAP NUM | MKT AREA 01

NEIGHBORHOOD/LOC 1002.00

AREA TYPE	TOTAL GROSS AREA	PCT OF BASE	TOT ADJ AREA	SUBAREA MARKET VALUE
BAS	372	100	372	25,865
TOTALS	372		372	25,865

MARKET ADJUSTMENTS

TYPE	MDL	EFF. AREA	TOT ADJ PTS	EFF. BASE RATE	REPL. COST NEW	AYB	EYB	ECON	FNCT		NORM	% COND
1103	04	372	79.2330	69.53	25,865	2023	2023	0	0	0	0.00	100.00

2 CONCESSION – 0% - 2024 Heated Area: 372 HX Base Yr

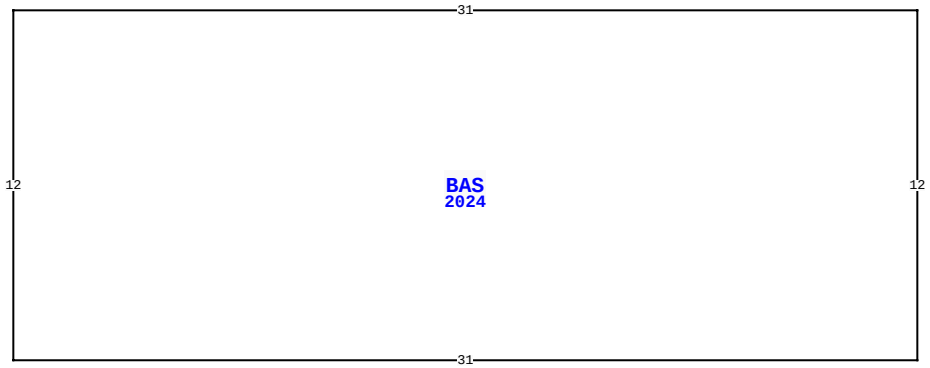

520 CENTRE ST, FERNANDINA BEACH

BLD DATE	12/30/2021 KK	LGL DATE	
XF DATE		LAND DATE	
INC DATE		AG DATE	

NASSAU COUNTY PROPERTY

PAGE 2 of 3 2

VALUATION SUMMARY

VALUATION BY	STANDARD
Tax Group: 2	Tax Dist:
BUILDING MARKET VALUE	871,842
TOTAL MARKET OB/XF VALUE	59,108
TOTAL LAND VALUE - MARKET	1,250,000
TOTAL MARKET VALUE	2,180,950
SOH/AGL Deduction	546,358
ASSESSED VALUE	1,634,592
TOTAL EXEMPTION VALUE	0
BASE TAXABLE VALUE	1,634,592
TOTAL JUST VALUE	2,180,950
NCON VALUE	26,797
INCOME VALUE	
PREVIOUS YEAR MKT VALUE	2,216,357

PERMIT NUM	DESCRIPTION	AMT	ISSUED
20120542	UPGRADE CYLS & LI	1,500	04/02/2012
20120448	FIRE ALARM FOR PE	2,697	03/16/2012
20120318	PLUMB FOR PEPPERS	16,750	02/29/2012
20120330	ELEC FOR PEPPERS	21,000	02/29/2012
20120207	A/C FOR PEPPERS	43,000	02/08/2012
20120164	TENANT BUILD OUT	76,000	02/01/2012

SALES DATA

OFF RECORD Number	DATE	TYPE INST	Q U /	V I /	RSN CD	SALE PRICE
1855/1697	4/26/2013	WD	Q	I	01	2,065,200
GRANTOR: 520-530 CENTRE STREET						
GRANTEE: LOS ARRAYANES INC						
1830/1265	12/19/2012	WD	U	I	11	100
GRANTOR: SHAW DONALD M						
GRANTEE: 520-530 CENTRE STRE						

BUILDING NOTES

BUILDING DIMENSIONS

BAS=[YR=2024;ORIG=50,20] E31 S12 W31 N12 $
.

EXTRA FEATURES

LN	OB/XF CODE	DESCRIPTION	BLD	CAP	L	W	UNITS	UT	Adj R	ADJ UNIT PRICE	ORIG COND	YEAR ON	YEAR ACTUAL	Q	% COND	OB/XF MKT VALUE	NOTES
11	0978	SECURTY LT	0	0	0	0	6.00	UT	450.00	450.00	100	2011	2011	3	81	2,187	
12	0646	LWN SPRK H	0	0	0	0	12.00	UT	2.00	2.00	100	2011	2011	3	64	15	
13	0858	SCULP CONC	0	0	0	0	194.00	SF	13.00	13.00	100	2011	2011	3	98	2,472	
14	0464	FNC GT 10'	0	0	0	0	2.00	UT	140.00	140.00	100	2011	2011	3	81	227	
15	0966	FIRE SPRNK	0	0	0	0	3,705.00	SF	3.00	3.00	100	2011	2011	3	92	10,226	
16	0858	SCULP CONC	0	0	0	0	123.00	SF	13.00	13.00	100	2012	2012	3	98	1,567	
17	0885	WATERSCAPE	0	0	0	0	1.00	UT	1,200.00	1,200.00	100	2012	2012	3	100	1,200	
18	0964	HALON SYST	0	0	14	3	42.00	SF	50.00	50.00	100	2012	2012	3	93	1,953	
19	0381	COOLER	0	0	8	8	64.00	SF	82.50	82.50	100	2012	2012	3	70	3,696	
20	0383	FREEZER	0	0	8	4	32.00	SF	105.00	105.00	100	2012	2012	3	70	2,352	

TOTAL OB/XF 25,895

LAND DESCRIPTION

LN	USE CODE	CLS	LAND USE DESCRIPTION	CAP	RD	LOC ZONE	FRONT	DEPTH	TOT LND UTS	UNIT TYPE	DT	DPTH FACT	% COND	TOT ADJ	UNIT PRICE	ADJ UNIT PRICE	LAND VALUE	OTHER ADJUSTMENTS AND NOTES	YEAR	DENSITY	DECL	FRZ	YR	CONSRV

REVIEW DATE 07/25/2023 BY HS Total Acres: 0.00 Total Land Value: 1,250,000 Market: 0 Agricultural: 0 Common: 1,250,000 PRINTED 08/06/2024 BY SYS

BLOCK 29 LOT 12 13 14 15
IN OR 1855/1697
ESMT OR 1463/723

LOS ARRAYANES INC
530 CENTRE ST
FERNANDINA BEACH, FL 32034

2024

00-00-31-1800-0029-0120

NASSAU COUNTY PROPERTY

BUILDING CHARACTERISTICS

ELEMENT	CD	CONSTRUCTION

DOR CODE	2100	RESTAURANTS/CAFE	
MAP NUM		MKT AREA	01
NEIGHBORHOOD/LOC	1002.00		

AREA TYPE	TOTAL GROSS AREA	PCT OF BASE	TOT ADJ AREA	SUBAREA MARKET VALUE
TOTALS				

MARKET ADJUSTMENTS

TYPE	MDL	EFF. AREA	TOT ADJ PTS	EFF. BASE RATE	REPL. COST NEW	AYB	EYB	ECON	FNCT		NORM	% COND

BLD DATE	12/30/2021	KK	LGL DATE
XF DATE			LAND DATE
INC DATE			AG DATE

VALUATION SUMMARY

VALUATION BY	STANDARD
Tax Group: 2	Tax Dist:
BUILDING MARKET VALUE	871,842
TOTAL MARKET OB/XF VALUE	59,108
TOTAL LAND VALUE - MARKET	1,250,000
TOTAL MARKET VALUE	2,180,950
SOH/AGL Deduction	546,358
ASSESSED VALUE	1,634,592
TOTAL EXEMPTION VALUE	0
BASE TAXABLE VALUE	1,634,592
TOTAL JUST VALUE	2,180,950
NCON VALUE	26,797
INCOME VALUE	
PREVIOUS YEAR MKT VALUE	2,216,357

PERMIT NUM	DESCRIPTION	AMT	ISSUED
20112281	REMOVE OLD CEILIN	0	12/22/2011
20110383	XFOB	5,850	03/17/2011
20110277	SIGN	3,200	03/01/2011
20110191	ELEC OTHER	4,200	02/09/2011
20110101	NEW CONSTR	1,000	01/21/2011
20102177	MECH OTHER	1,500	12/22/2010

SALES DATA

OFF RECORD Number	DATE	TYPE INST	Q U /	V I /	RSN CD	SALE PRICE
1855/1697	4/26/2013	WD	Q	I	01	2,065,200
GRANTOR: 520-530 CENTRE STREET						
GRANTEE: LOS ARRAYANES INC						
1830/1265	12/19/2012	WD	U	I	11	100
GRANTOR: SHAW DONALD M						
GRANTEE: 520-530 CENTRE STRE						

BUILDING NOTES

BUILDING DIMENSIONS

EXTRA FEATURES

LN	OB/XF CODE	DESCRIPTION	BLD	CAP	L	W	UNITS	UT	Adj R	ADJ UNIT PRICE	ORIG COND	YEAR ON	YEAR ACTUAL	Q	% COND	OB/XF MKT VALUE	NOTES
21	1123	CB 8"	0	0	54	1	54.00	SF	6.15	6.15	100	2024	2023		100	332	
22	0463	FENCE GATE	0	0	0	0	2.00	UT	300.00	300.00	100	2024	2023		100	600	

LAND DESCRIPTION

TOTAL OB/XF 932

LN	USE CODE	CLS	LAND USE DESCRIPTION	CAP	RD	LOC ZONE	FRONT	DEPTH	TOT LND UTS	UNIT TYPE	DT	DPTH FACT	% COND	TOT ADJ	UNIT PRICE	ADJ UNIT PRICE	LAND VALUE	OTHER ADJUSTMENTS AND NOTES	YEAR	DENSITY	DECL	FRZ	YR	CONSRV

REVIEW DATE 07/25/2023 BY HS Total Acres: 0.00 Total Land Value: 1,250,000 Market: 0 Agricultural: 0 Common: 1,250,000 PRINTED 08/06/2024 BY SYS