BLOCK 25 LOT 12
IN OR 1944/36
CITY OF FDNA BEACH

BLAIS DAVID N & MARY CATHERINE
115 S 5TH ST
FERNANDINA BEACH, FL 32034

2024

00-00-31-1800-0025-0120

NASSAU COUNTY PROPERTY

BUILDING CHARACTERISTICS

ELEMENT	CD	CONSTRUCTION
Exterior Wall	10	ABOVE AVG 90
Exterior Wall	05	AVERAGE 10
Roof Structur	03	GABLE/HIP 100
Roof Cover	03	COMP SHNGL 100
Interior Wall	05	DRYWALL 100
Interior Floo	14	CARPET 80
Interior Floo	08	SHT VINYL 20
Air Condition	03	CENTRAL 100
Heating Type	04	AIR DUCTED 100
Bedrooms		2 100
Bathrooms		1.5 100
Frame	02	WOOD FRAME 100
Stories	1.	1. 100
Units		0 100
BUD8 Adjustme	02	DIST FB 100
Occupancy	00	NONE 100
Quality	04	Quality Level 04

DOR CODE 0100 SINGLE FAMILY
MAP NUM | MKT AREA 01
NEIGHBORHOOD/LOC 1005.00

AREA TYPE	TOTAL GROSS AREA	PCT OF BASE	TOT ADJ AREA	SUBAREA MARKET VALUE
BAS	1,208	100	1,208	182,219
DCK	64	10	6	905
FAT	256	20	51	7,693
FOP	84	30	25	3,771
STR	21	10	2	302
STR	12	10	1	151
TOTALS	1,645		1,293	195,042

MARKET ADJUSTMENTS

TYPE	MDL	EFF. AREA	TOT ADJ PTS	EFF. BASE RATE	REPL. COST NEW	AYB	EYB	ECON	FNCT		NORM	% COND
0500	01	1,293	118.7004	178.05	230,219	1900	1990	0	0	0	15.28	84.72

1 SFR CUST – 100% - 2019 Heated Area: 1259 HX Base Yr

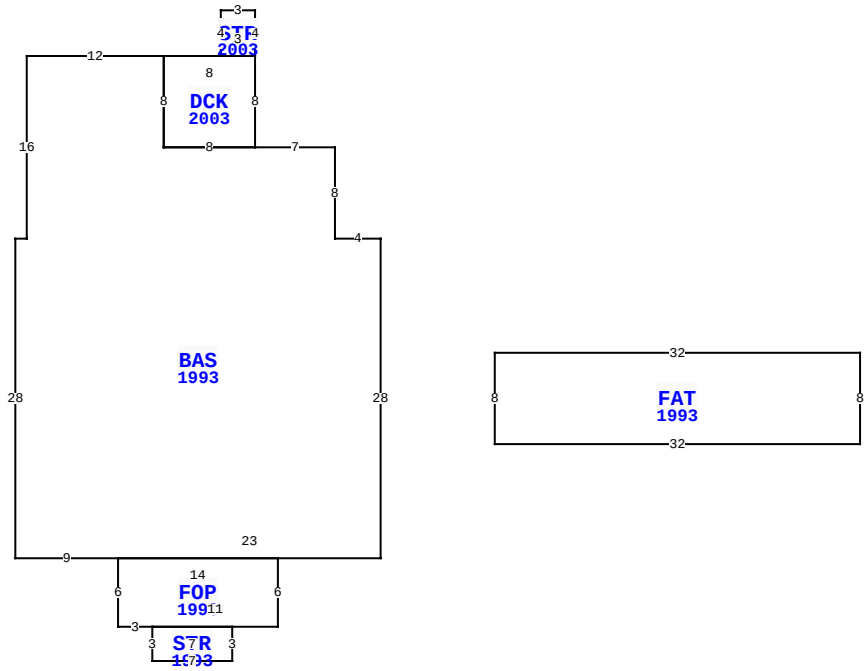

115 S 5TH ST, FERNANDINA BEACH

BLD DATE		LGL DATE	
XF DATE		LAND DATE	
INC DATE		AG DATE	

VALUATION SUMMARY

VALUATION BY		STANDARD
Tax Group: 2	Tax Dist:	
BUILDING MARKET VALUE		202,271
TOTAL MARKET OB/XF VALUE		7,384
TOTAL LAND VALUE - MARKET		200,000
TOTAL MARKET VALUE		409,655
SOH/AGL Deduction		0
ASSESSED VALUE		409,655
TOTAL EXEMPTION VALUE	13	409,655
BASE TAXABLE VALUE		0
TOTAL JUST VALUE		409,655
NCON VALUE		0
INCOME VALUE		
PREVIOUS YEAR MKT VALUE		400,767

PERMIT NUM	DESCRIPTION	AMT	ISSUED
20160087	HALF BATH	8,500	01/15/2016
20120928	6' WOOD FENCE	0	05/23/2012
20120173	DEMOLISH CARPORT	800	02/02/2012
20033513	REWIRE	1,000	07/21/2003
20033500	REPIPE & FIXTURES	3,000	07/16/2003
20033001	RENOVATE BEDR & B	16,000	04/24/2003

SALES DATA

OFF RECORD Number	DATE	TYPE INST	Q / U	V / I	RSN CD	SALE PRICE
1944/0036	10/24/2014	WD	Q	I	02	275,000
GRANTOR: CASHMORE ROBERT F & C						
GRANTEE: BLAIS DAVID N & MAR						
1778/0109	1/30/2012	WD	Q	I	01	173,000
GRANTOR: BOSWELL MARY HOLT						
GRANTEE: CASHMORE ROBERT F &						

BUILDING NOTES

BUILDING DIMENSIONS

BAS=[YR=1993] W4N8W7 DCK=[YR=2003] N8 STR=[YR=2003] N4W3S4E3$ W8S8E8$ W8 N8W12S16W1S28E9 FOP=[YR=1993] S6 E3 STR=[YR=1993] S3E7N3W7$ E11N6W14$ E23 N28$ PTR= E10S10 FAT=[YR=1993] E32S8W32 N8 $N10W10$.

EXTRA FEATURES

LN	OB/XF CODE	DESCRIPTION	BLD	CAP	L	W	UNITS	UT	Adj R	ADJ UNIT PRICE	ORIG COND	YEAR ON	YEAR ACTUAL	Q	% COND	OB/XF MKT VALUE	NOTES
1	0810	CONCRETE A	0	100	12	7	84.00	SF	6.50	6.50	100	1980	1980	3	32.5	177	
2	0810	CONCRETE A	0	100	0	0	1,680.00	SF	6.50	6.50	100	1993	1993	3	66	7,207	

LAND DESCRIPTION

TOTAL OB/XF 7,384

LN	USE CODE	CLS	LAND USE DESCRIPTION	CAP	RD	LOC ZONE	FRONT	DEPTH	TOT LND UTS	UNIT TYPE	DT	DPTH FACT	% COND	TOT ADJ	UNIT PRICE	ADJ UNIT PRICE	LAND VALUE	OTHER ADJUSTMENTS AND NOTES	YEAR	DENSITY	DECL	FRZ	YR	CONSRV
1	000100	C	SFR	100	0003	R-2	50.00	100.00	50.00	FF		1.00	1.00	1.00	4,000.00	4,000.00	200,000							

REVIEW DATE 07/06/2020 BY DJA Total Acres: 0.00 Total Land Value: 200,000 Market: 0 Agricultural: 0 Common: 200,000 PRINTED 08/06/2024 BY SYS

BLOCK 25 LOT 12
IN OR 1944/36
CITY OF FDNA BEACH

BLAIS DAVID N & MARY CATHERINE
115 S 5TH ST
FERNANDINA BEACH, FL 32034

2024

00-00-31-1800-0025-0120

BUILDING CHARACTERISTICS

ELEMENT	CD	CONSTRUCTION
Exterior Wall	10	ABOVE AVG 100
Roof Structur	03	GABLE/HIP 100
Roof Cover	03	COMP SHNGL 100
Interior Wall	01	MINIMUM 100
Interior Floo	03	CONC FINSH 100
Air Condition	01	NONE 100
Heating Type	01	NONE 100
Bedrooms		0 100
Bathrooms		0 100
Frame	02	WOOD FRAME 100
Stories	0	0 100
Units		0 100
Occupancy	00	NONE 100
Quality	04	Quality Level 04

DOR CODE	0100	SINGLE FAMILY	
MAP NUM		MKT AREA	01
NEIGHBORHOOD/LOC	1005.00		

AREA TYPE	TOTAL GROSS AREA	PCT OF BASE	TOT ADJ AREA	SUBAREA MARKET VALUE
BAS	264	100	264	6,079
FOP	168	30	50	1,152
TOTALS	432		314	7,229

MARKET ADJUSTMENTS

TYPE	MDL	EFF. AREA	TOT ADJ PTS	EFF. BASE RATE	REPL. COST NEW	AYB	EYB	ECON	FNCT		NORM	% COND
6500	01	314	73.9200	25.87	8,123	2013	2013	0	0	0	11.00	89.00

2 GARAGE RES – 100% - 2019 Heated Area: 264 HX Base Yr

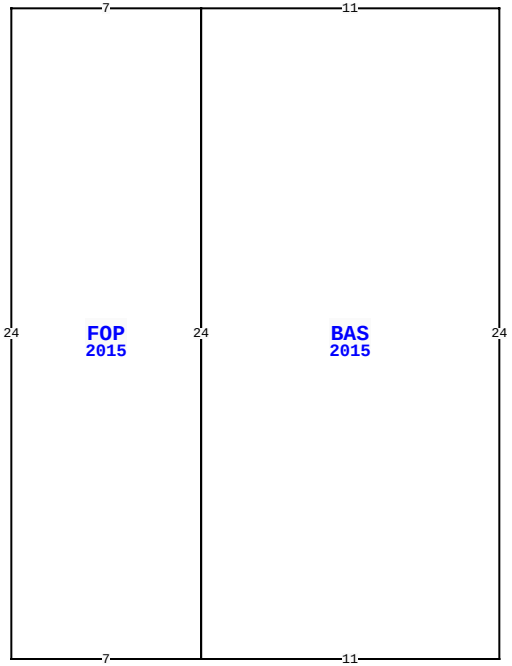

115 S 5TH ST, FERNANDINA BEACH

BLD DATE		LGL DATE	
XF DATE		LAND DATE	
INC DATE		AG DATE	

NASSAU COUNTY PROPERTY

PAGE 2 of 2 2

VALUATION SUMMARY

VALUATION BY		STANDARD
Tax Group: 2	Tax Dist:	
BUILDING MARKET VALUE		202,271
TOTAL MARKET OB/XF VALUE		7,384
TOTAL LAND VALUE - MARKET		200,000
TOTAL MARKET VALUE		409,655
SOH/AGL Deduction		0
ASSESSED VALUE		409,655
TOTAL EXEMPTION VALUE	13	409,655
BASE TAXABLE VALUE		0
TOTAL JUST VALUE		409,655
NCON VALUE		0
INCOME VALUE		
PREVIOUS YEAR MKT VALUE		400,767

PERMIT NUM	DESCRIPTION	AMT	ISSUED
20020952	REPLC OUTSIDE WIR	1,000	06/06/2002
20004480	WINDOW REPLACEMEN	3,000	12/14/2000
20004480	RODENT REPAIR	1,000	12/06/2000
20003208	REROOF	1,900	06/12/2000

SALES DATA

OFF RECORD Number	DATE	TYPE INST	Q / U	V / I	RSN CD	SALE PRICE
1944/0036	10/24/2014	WD	Q	I	02	275,000
GRANTOR: CASHMORE ROBERT F & C						
GRANTEE: BLAIS DAVID N & MAR						
1778/0109	1/30/2012	WD	Q	I	01	173,000
GRANTOR: BOSWELL MARY HOLT						
GRANTEE: CASHMORE ROBERT F &						

BUILDING NOTES

BUILDING DIMENSIONS

BAS=[YR=2015] W11 FOP=[YR=2015] W7 S24 E7 N24$ S24 E11 N24$.

EXTRA FEATURES

LN	OB/XF CODE	DESCRIPTION	BLD	CAP	L	W	UNITS	UT	Adj R	ADJ UNIT PRICE	ORIG COND	YEAR ON	YEAR ACTUAL	Q	% COND	OB/XF MKT VALUE	NOTES

LAND DESCRIPTION

TOTAL OB/XF 0

LN	USE CODE	CLS	LAND USE DESCRIPTION	CAP	RD	LOC ZONE	FRONT	DEPTH	TOT LND UTS	UNIT TYPE	DT	DPTH FACT	% COND	TOT ADJ	UNIT PRICE	ADJ UNIT PRICE	LAND VALUE	OTHER ADJUSTMENTS AND NOTES	YEAR	DENSITY	DECL	FRZ	YR	CONSRV

REVIEW DATE 07/06/2020 BY DJA Total Acres: 0.00 Total Land Value: 200,000 Market: 0 Agricultural: 0 Common: 200,000 PRINTED 08/06/2024 BY SYS