BLOCK 23 LOT 5
L/E OR 1283/1367
CITY OF FDNA BEACH

BLALOCK ROBERT N & MARTHA P
22 N 4TH ST
FERNANDINA BEACH, FL 32034

2024

00-00-31-1800-0023-0050

NASSAU COUNTY PROPERTY

BUILDING CHARACTERISTICS

ELEMENT	CD	CONSTRUCTION
Exterior Wall	07	ASB SHNGLE 100
Roof Structur	08	IRREGULAR 100
Roof Cover	12	MODULAR MT 100
Interior Wall	03	PLASTER 100
Interior Floo	12	HARDWOOD 80
Interior Floo	14	CARPET 20
Air Condition	03	CENTRAL 100
Heating Type	04	AIR DUCTED 100
Bedrooms		4 100
Bathrooms		2 100
Frame	02	WOOD FRAME 100
Stories	2.	2. 100
Units		0 100
BUD8 Adjustme	02	DIST FB 100
Occupancy	00	NONE 100
Quality	03	Quality Level 03
DOR CODE	0100	SINGLE FAMILY
MAP NUM		MKT AREA 01
NEIGHBORHOOD/LOC	1005.00	

AREA TYPE	TOTAL GROSS AREA	PCT OF BASE	TOT ADJ AREA	SUBAREA MARKET VALUE
BAS	1,284	100	1,284	135,899
BAS	133	100	133	14,077
FSP	143	40	57	6,033
FUS	1,192	100	1,192	126,161
STP	36	10	4	423
UOP	40	20	8	847
UOP	98	20	20	2,117
TOTALS	2,926		2,698	285,556

MARKET ADJUSTMENTS

TYPE	MDL	EFF. AREA	TOT ADJ PTS	EFF. BASE RATE	REPL. COST NEW	AYB	EYB	ECON	FNCT		NORM	% COND
0500	01	2,698	96.0000	144.00	388,512	1911	1985	0	0	0	26.50	73.50

1 SFR CUST – 100% - 2019 Heated Area: 2609 HX Base Yr 2019

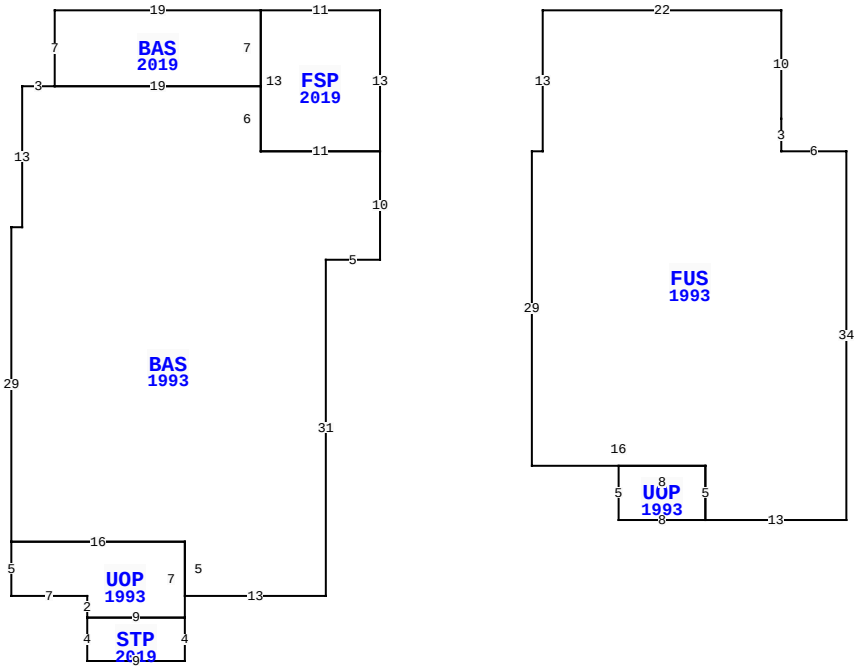

22 N 4TH ST, FERNANDINA BEACH

BLD DATE		LGL DATE	
XF DATE		LAND DATE	
INC DATE		AG DATE	

VALUATION SUMMARY

VALUATION BY		STANDARD
Tax Group: 2	Tax Dist:	
BUILDING MARKET VALUE		303,571
TOTAL MARKET OB/XF VALUE		7,578
TOTAL LAND VALUE - MARKET		250,000
TOTAL MARKET VALUE		561,149
SOH/AGL Deduction		287,314
ASSESSED VALUE		273,835
TOTAL EXEMPTION VALUE	HX HB	50,000
BASE TAXABLE VALUE		223,835
TOTAL JUST VALUE		561,149
NCON VALUE		0
INCOME VALUE		
PREVIOUS YEAR MKT VALUE		548,977

PERMIT NUM	DESCRIPTION	AMT	ISSUED
20182967	REMODEL	350,000	08/24/2018
20182968	GARAGE	29,875	08/24/2018
20182781	DEMO FDG	0	08/10/2018
20142151	MTLROOF	25,000	10/06/2014
20070187	REPLACE SEWER LIN	700	02/02/2007
7094	REPAIR/RRF	700	06/10/1992

SALES DATA

OFF RECORD Number	DATE	TYPE INST	Q U /	V I /	RSN CD	SALE PRICE
1283/1367	12/23/2004	WD	U	I	18	210,000
GRANTOR: ROGERS ELLA LOUISE PA						
GRANTEE: BLALOCK ROBERT N &						
0677/0132	3/16/1993	PR	U	I	18	100
GRANTOR: PARTIN ELDRIDGE P/R						
GRANTEE: PARTIN JOHN ETAL						

BUILDING NOTES

BUILDING DIMENSIONS

FSP=[YR=2019] W11 BAS=[YR=2019] W19 S7 BAS=[YR=1993] W3 S13 W1 S29 UOP=[YR=1993] S5 E7 S2 STP=[YR=2019] S4 E9 N4 W9$ E9 N7 W16 $ E16 S5 E13 N31 E5 N10 W11 N6 W19$ E19 N7$ S13 E11 N13$ PTR= E15 FUS=[YR=1993] E22 S10 S3 E6 S34 W13 UOP=[YR=1993] N5 W8 S5E8 $ N5 W16 N29 E1 N13 $ W15 $.

EXTRA FEATURES

L N	OB/XF CODE	DESCRIPTION	BLD	CAP	L	W	UNITS	UT	Adj R	ADJ UNIT PRICE	ORIG COND	YEAR ON	YEAR ACTUAL	Q	% COND	OB/XF MKT VALUE	NOTES
1	0504	FP-ELECTRI	0	100	0	0	1.00	UT	2,000.00	2,000.00	100	1911	1911	3	20	400	
2	0825	BRICK	0	100	0	0	1,450.00	SF	5.00	5.00	100	2019	2019	3	99	7,178	

LAND DESCRIPTION

TOTAL OB/XF 7,578

L N	USE CODE	CLS	LAND USE DESCRIPTION	CAP	R D	LOC ZONE	FRONT	DEPTH	TOT LND UTS	UNIT TYPE	D T	DPTH FACT	% COND	TOT ADJ	UNIT PRICE	ADJ UNIT PRICE	LAND VALUE	OTHER ADJUSTMENTS AND NOTES	YEAR	DENSITY	DECL	FRZ	YR	CONSRV
1	000100	C	SFR	100	0003	C-3	50.00	100.00	5,000.00	SF		1.00	1.00	1.00	50.00	50.00	250,000							

REVIEW DATE 12/03/2019 BY DJ Total Acres: 0.00 Total Land Value: 250,000 Market: 0 Agricultural: 0 Common: 250,000 PRINTED 08/06/2024 BY SYS

BLOCK 23 LOT 5
L/E OR 1283/1367
CITY OF FDNA BEACH

BLALOCK ROBERT N & MARTHA P
22 N 4TH ST
FERNANDINA BEACH, FL 32034

2024

00-00-31-1800-0023-0050

NASSAU COUNTY PROPERTY

BUILDING CHARACTERISTICS

ELEMENT	CD	CONSTRUCTION
Exterior Wall	10	ABOVE AVG 100
Roof Structur	03	GABLE/HIP 100
Roof Cover	03	COMP SHNGL 100
Interior Wall	01	MINIMUM 100
Interior Floo	03	CONC FINSH 100
Air Condition	01	NONE 100
Heating Type	01	NONE 100
Bedrooms		0 100
Bathrooms		0 100
Frame	02	WOOD FRAME 100
Stories	1.	1. 100
Units		0 100
Quality	05	Quality Level 05

DOR CODE	0100	SINGLE FAMILY	
MAP NUM		MKT AREA	01
NEIGHBORHOOD/LOC	1005.00		

AREA TYPE	TOTAL GROSS AREA	PCT OF BASE	TOT ADJ AREA	SUBAREA MARKET VALUE
BAS	560	100	560	18,015
TOTALS	560		560	18,015

MARKET ADJUSTMENTS

TYPE	MDL	EFF. AREA	TOT ADJ PTS	EFF. BASE RATE	REPL. COST NEW	AYB	EYB	ECON	FNCT		NORM	% COND
6500	11	560	95.7440	33.51	18,766	2019	2019	0	0	0	4.00	96.00

2 GARAGE RES – 100% - 2019 Heated Area: 560 HX Base Yr 2019

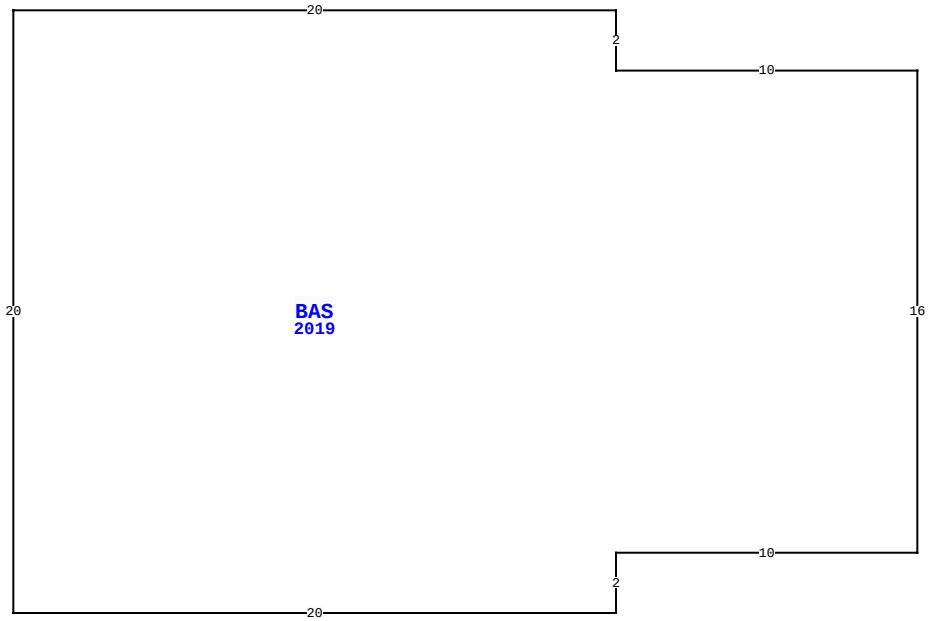

22 N 4TH ST, FERNANDINA BEACH

BLD DATE		LGL DATE	
XF DATE		LAND DATE	
INC DATE		AG DATE	

VALUATION SUMMARY

VALUATION BY		STANDARD
Tax Group: 2	Tax Dist:	
BUILDING MARKET VALUE		303,571
TOTAL MARKET OB/XF VALUE		7,578
TOTAL LAND VALUE - MARKET		250,000
TOTAL MARKET VALUE		561,149
SOH/AGL Deduction		287,314
ASSESSED VALUE		273,835
TOTAL EXEMPTION VALUE	HX HB	50,000
BASE TAXABLE VALUE		223,835
TOTAL JUST VALUE		561,149
NCON VALUE		0
INCOME VALUE		
PREVIOUS YEAR MKT VALUE		548,977

PERMIT NUM	DESCRIPTION	AMT	ISSUED
7007	REPAIR/RRF	6,400	04/21/1992
3984	REPAIR/RRF	1,200	11/12/1986

SALES DATA

OFF RECORD Number	DATE	TYPE INST	Q U	V I	RSN CD	SALE PRICE
1283/1367	12/23/2004	WD	U	I	18	210,000
GRANTOR: ROGERS ELLA LOUISE PA						
GRANTEE: BLALOCK ROBERT N &						
0677/0132	3/16/1993	PR	U	I	18	100
GRANTOR: PARTIN ELDRIDGE P/R						
GRANTEE: PARTIN JOHN ETAL						

BUILDING NOTES

BUILDING DIMENSIONS

BAS=[YR=2019] W10 N2 W20 S20 E20 N2 E10 N16$.

EXTRA FEATURES

L N	OB/XF CODE	DESCRIPTION	BLD	CAP	L	W	UNITS	UT	Adj R	ADJ UNIT PRICE	ORIG COND	YEAR ON	YEAR ACTUAL	Q	% COND	OB/XF MKT VALUE	NOTES

LAND DESCRIPTION

TOTAL OB/XF 0

L N	USE CODE	CLS	LAND USE DESCRIPTION	CAP	R D	LOC ZONE	FRONT	DEPTH	TOT LND UTS	UNIT TYPE	D T	DPTH FACT	% COND	TOT ADJ	UNIT PRICE	ADJ UNIT PRICE	LAND VALUE	OTHER ADJUSTMENTS AND NOTES	YEAR	DENSITY	DECL	FRZ	YR	CONSRV

REVIEW DATE 12/03/2019 BY DJ Total Acres: 0.00 Total Land Value: 250,000 Market: 0 Agricultural: 0 Common: 250,000 PRINTED 08/06/2024 BY SYS