BLOCK 20 LOTS 3 & 4
IN OR 1619/722 & OR 1701/1613
CITY OF FDNA BEACH

GROFF THOMAS & SUSAN
314 N 4TH ST
FERNANDINA BEACH, FL 32034

2024

00-00-31-1800-0020-0030

BUILDING CHARACTERISTICS

ELEMENT	CD	CONSTRUCTION
Exterior Wall	10	ABOVE AVG 50
Exterior Wall	23	REINF CONC 50
Roof Structur	03	GABLE/HIP 100
Roof Cover	11	SLATE 100
Interior Wall	05	DRYWALL 100
Interior Floo	12	HARDWOOD 100
Air Condition	03	CENTRAL 100
Heating Type	04	AIR DUCTED 100
Bedrooms		3 100
Bathrooms		2 100
Frame	02	WOOD FRAME 100
Stories	1.5	1.5 100
Units		0 100
Occupancy	00	NONE 100
Quality	03	Quality Level 03
DOR CODE	0100	SINGLE FAMILY
MAP NUM		MKT AREA 01
NEIGHBORHOOD/LOC	1001.00	

AREA TYPE	TOTAL GROSS AREA	PCT OF BASE	TOT ADJ AREA	SUBAREA MARKET VALUE
BAS	1,312	100	1,312	204,168
DCK	201	10	20	3,112
FGR	320	55	176	27,388
FOP	15	30	4	622
FOP	160	30	48	7,469
STR	18	10	2	311
TOTALS	2,026		1,562	243,073

MARKET ADJUSTMENTS

TYPE	MDL	EFF. AREA	TOT ADJ PTS	EFF. BASE RATE	REPL. COST NEW	AYB	EYB	ECON	FNCT		NORM	% COND
0900	01	1,562	132.0900	165.11	257,902	2011	2011	0	0	0	5.75	94.25

1 SNGL FAM – 100% - 2014 Heated Area: 1312 HX Base Yr 2014

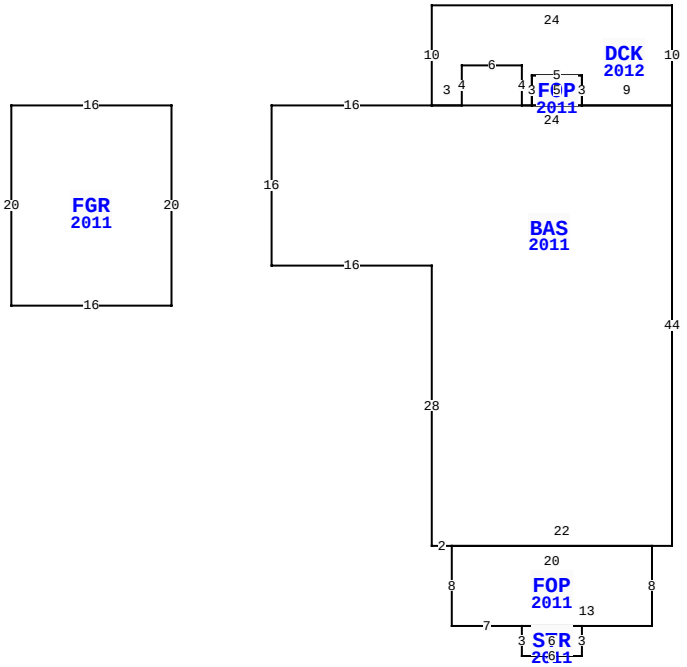

314 N 4TH ST, FERNANDINA BEACH

BLD DATE		LGL DATE	
XF DATE		LAND DATE	04/30/2024 MLU
INC DATE		AG DATE	

NASSAU COUNTY PROPERTY

PAGE 1 of 1 2

VALUATION SUMMARY

VALUATION BY		STANDARD
Tax Group: 2	Tax Dist:	
BUILDING MARKET VALUE		243,073
TOTAL MARKET OB/XF VALUE		12,144
TOTAL LAND VALUE - MARKET		200,000
TOTAL MARKET VALUE		455,217
SOH/AGL Deduction		247,546
ASSESSED VALUE		207,671
TOTAL EXEMPTION VALUE	HX HB	50,000
BASE TAXABLE VALUE		157,671
TOTAL JUST VALUE		455,217
NCON VALUE		0
INCOME VALUE		
PREVIOUS YEAR MKT VALUE		419,414

PERMIT NUM	DESCRIPTION	AMT	ISSUED
20122564	10X24 DECK	2,200	12/26/2012
20122219	BRICK PAVERS	0	10/30/2012
20111064	4'H FENCE	2,350	06/29/2011
20101514	STANDING SEAM ROO	130,000	09/03/2010
20101513	NEW CONSTR	0	07/16/2010

SALES DATA

OFF RECORD Number	DATE	TYPE INST	Q / U	V / I	RSN CD	SALE PRICE
1619/0722	5/12/2009	WD	Q	V	02	75,000

GRANTOR: BRAEGER PAUL J & SHER
GRANTEE: GROFF THOMAS & SUSA

BUILDING NOTES

BUILDING DIMENSIONS

DCK=[YR=2012] W24S10 BAS=[YR=2011] W16S16 E16 S28 E2
FOP=[YR=2011] S8E7 STR=[YR=2011] S3E6N3W6$ E13N8 W20$
E22N44W24$ E3N4E6S4E1 FOP=[YR=2011] E5N3W5S3$ N3E5S3E9N10$
PTR=W50 S10 FGR=[YR=2011] W16S20E16N20$N10 E50$.

EXTRA FEATURES

LN	OB/XF CODE	DESCRIPTION	BLD	CAP	L	W	UNITS	UT	Adj R	ADJ UNIT PRICE	ORIG COND	YEAR ON	YEAR ACTUAL	Q	% COND	OB/XF MKT VALUE	NOTES
1	1130	REINFR 6	0	100	33	6	198.00	SF	6.33	6.33	100	2011	2011	3	98	1,227	
2	0855	CONC PAVER	0	100	81	17	1,377.00	SF	7.00	7.00	100	2012	2012	3	93	8,964	
3	0855	CONC PAVER	0	100	0	0	300.00	SF	7.00	7.00	100	2012	2012	3	93	1,953	

LAND DESCRIPTION

TOTAL OB/XF 12,144

LN	USE CODE	CLS	LAND USE DESCRIPTION	CAP	RD	LOC ZONE	FRONT	DEPTH	TOT LND UTS	UNIT TYPE	DT	DPTH FACT	% COND	TOT ADJ	UNIT PRICE	ADJ UNIT PRICE	LAND VALUE	OTHER ADJUSTMENTS AND NOTES	YEAR	DENSITY	DECL	FRZ	YR	CONSRV
1	000100	C	SFR	100	0006	R-2	50.00	100.00	50.00	FF		1.00	1.00	1.00	4,000.00	4,000.00	200,000							

REVIEW DATE 05/12/2019 BY KBA Total Acres: 0.00 Total Land Value: 200,000 Market: 0 Agricultural: 0 Common: 200,000 PRINTED 08/06/2024 BY SYS