BLOCK 16 W4/5 OF LOT 2 & LOT 3
IN OR 1555/248
CITY OF FDNA BEACH

ROSS RONALD J/RICKETTS-ROSS FAITH A
210 N 3RD ST
FERNANDINA BEACH, FL 32034

2024

00-00-31-1800-0016-0022

BUILDING CHARACTERISTICS

ELEMENT	CD	CONSTRUCTION
Exterior Wall	31	HARDIE BRD 100
Roof Structur	03	GABLE/HIP 100
Roof Cover	03	COMP SHNGL 100
Interior Wall	05	DRYWALL 100
Interior Floo	12	HARDWOOD 100
Air Condition	03	CENTRAL 100
Heating Type	04	AIR DUCTED 100
Bedrooms		2 100
Bathrooms		3 100
Frame	02	WOOD FRAME 100
Stories	2.	2. 100
Units		0 100
BUD8 Adjustme	02	DIST FB 100
Occupancy	00	NONE 100
Quality	03	Quality Level 03

DOR CODE 0100 SINGLE FAMILY
MAP NUM | MKT AREA 01
NEIGHBORHOOD/LOC 1005.00

AREA TYPE	TOTAL GROSS AREA	PCT OF BASE	TOT ADJ AREA	SUBAREA MARKET VALUE
BAS	824	100	824	132,078
BAS	160	100	160	25,646
BAS	263	100	263	42,156
FOP	138	30	41	6,572
FOP	138	30	41	6,572
FOP	20	30	6	962
FSP	120	40	48	7,694
FUS	824	100	824	132,078
STR	16	10	2	321
STR	20	10	2	321
TOTALS	2,559		2,215	355,040

MARKET ADJUSTMENTS

TYPE	MDL	EFF. AREA	TOT ADJ PTS	EFF. BASE RATE	REPL. COST NEW	AYB	EYB	ECON	FNCT		NORM	% COND
0500	01	2,215	113.6800	170.52	377,702	1900	2010	0	0	0	6.00	94.00

1 SFR CUST - 100% - 2014 Heated Area: 2071 HX Base Yr 2014

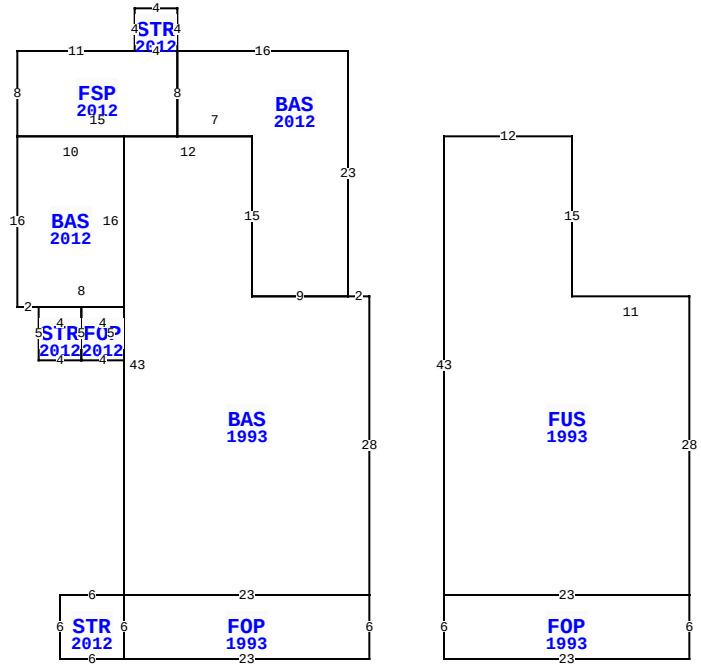

** This building has 11 Sub-Areas

210 N 3RD ST, FERNANDINA BEACH

BLD DATE	08/13/2014	KK	LGL DATE	
XF DATE			LAND DATE	04/30/2024 MLU
INC DATE			AG DATE	

NASSAU COUNTY PROPERTY

PAGE 1 of 2 2

VALUATION SUMMARY

VALUATION BY		STANDARD
Tax Group: 2	Tax Dist:	
BUILDING MARKET VALUE		466,960
TOTAL MARKET OB/XF VALUE		3,435
TOTAL LAND VALUE - MARKET		200,000
TOTAL MARKET VALUE		670,395
SOH/AGL Deduction		211,637
ASSESSED VALUE		458,758
TOTAL EXEMPTION VALUE	HX HB	50,000
BASE TAXABLE VALUE		408,758
TOTAL JUST VALUE		670,395
NCON VALUE		0
INCOME VALUE		
PREVIOUS YEAR MKT VALUE		617,732

PERMIT NUM	DESCRIPTION	AMT	ISSUED
20140947	DECK10X22	5,000	05/09/2014
20120552	RE-ROOF	2,000	04/03/2012
20120480	GAS	350	03/22/2012
20120315	RE-PIPE	6,500	02/28/2012
20120308	WIRING & FIXT.REM	7,000	02/27/2012
20120246	H/AC	13,000	02/14/2012

SALES DATA

OFF RECORD Number	DATE	TYPE INST	Q U	V I	RSN CD	SALE PRICE
1555/0248	3/10/2008	WD	Q	I		265,000
GRANTOR: HOWARD KENNETH W						
GRANTEE: ROSS RONALD J & FAI						
1393/1870	3/07/2006	WD	Q	I		309,000
GRANTOR: STROZINSKY JAMES J &						
GRANTEE: HOWARD KENNETH W						

BUILDING NOTES

BUILDING DIMENSIONS

BAS=[YR=1993] W2 BAS=[YR=2012] N23W16 STR=[YR=2012] N4W4S4 FSP=[YR=2012] W11S8 BAS=[YR=2012] S16E2 STR=[YR=2012] S5E4 FOP=[YR=2012] E4N5W4S5$ N5W4$ E8N16 W10$ E15N8W4$E4$S8E7S15E9$ W9 N15W12S43 STR=[YR=2012] W6S6E6 FOP=[YR=1993] E23N6W23S6$N6$ E23N28$ PTR=E30 FUS=[YR=1993] S28 FOP=[YR=1993] S6 W23N6E23$ W23N43E12S15E11$ W30 $.

EXTRA FEATURES

LN	OB/XF CODE	DESCRIPTION	BLD	CAP	L	W	UNITS	UT	Adj R	ADJ UNIT PRICE	ORIG COND	YEAR ON	YEAR ACTUAL	Q	% COND	OB/XF MKT VALUE	NOTES
1	0940	SHEDS/PORT	0	100	9	15	135.00	SF	33.00	33.00	100	2010	2010	3	45	2,005	
2	1242	WD DECK A	0	100	22	10	220.00	SF	10.00	10.00	100	2014	2014	3	65	1,430	

LAND DESCRIPTION

TOTAL OB/XF 3,435

LN	USE CODE	CLS	LAND USE DESCRIPTION	CAP	RD	LOC ZONE	FRONT	DEPTH	TOT LND UTS	UNIT TYPE	DT	DPTH FACT	% COND	TOT ADJ	UNIT PRICE	ADJ UNIT PRICE	LAND VALUE	OTHER ADJUSTMENTS AND NOTES	YEAR	DENSITY	DECL	FRZ	YR	CONSRV
1	000100	C	SFR	100	0003	R-2	50.00	113.00	50.00	FF		1.00	1.00	1.00	4,000.00	4,000.00	200,000							

REVIEW DATE 12/30/2019 BY DJA Total Acres: 0.00 Total Land Value: 200,000 Market: 0 Agricultural: 0 Common: 200,000 PRINTED 08/06/2024 BY SYS

BLOCK 16 W4/5 OF LOT 2 & LOT 3
IN OR 1555/248
CITY OF FDNA BEACH

ROSS RONALD J/RICKETTS-ROSS FAITH A
210 N 3RD ST
FERNANDINA BEACH, FL 32034

2024

00-00-31-1800-0016-0022

NASSAU COUNTY PROPERTY

BUILDING CHARACTERISTICS

ELEMENT	CD	CONSTRUCTION
Exterior Wall	10	ABOVE AVG 100
Roof Structur	03	GABLE/HIP 100
Roof Cover	03	COMP SHNGL 100
Interior Wall	05	DRYWALL 100
Interior Floo	12	HARDWOOD 100
Air Condition	03	CENTRAL 100
Heating Type	04	AIR DUCTED 100
Bedrooms		1 100
Bathrooms		1 100
Frame	02	WOOD FRAME 100
Stories	2.	2. 100
Units		0 100
Occupancy	00	NONE 100
Quality	04	Quality Level 04

DOR CODE 0100 SINGLE FAMILY
MAP NUM | MKT AREA 01
NEIGHBORHOOD/LOC 1005.00

AREA TYPE	TOTAL GROSS AREA	PCT OF BASE	TOT ADJ AREA	SUBAREA MARKET VALUE
APT	416	100	416	67,185
FOP	156	30	47	7,591
HXG	416	55	229	36,983
HXO	12	5	1	162
TOTALS	1,000		693	111,920

MARKET ADJUSTMENTS

TYPE	MDL	EFF. AREA	TOT ADJ PTS	EFF. BASE RATE	REPL. COST NEW	AYB	EYB	ECON	FNCT		NORM	% COND
0900	01	693	137.4450	171.81	119,064	2010	2010	0	0	0	6.00	94.00

2 SNGL FAM – 33.19% - 2014 Heated Area: 416 HX Base Yr 2014

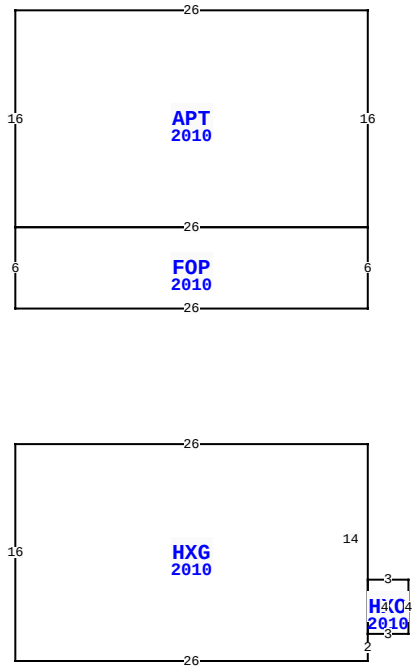

210 N 3RD ST, FERNANDINA BEACH

BLD DATE	08/13/2014 KK	LGL DATE	
XF DATE		LAND DATE	04/30/2024 MLU
INC DATE		AG DATE	

VALUATION SUMMARY

VALUATION BY		STANDARD
Tax Group: 2	Tax Dist:	
BUILDING MARKET VALUE		466,960
TOTAL MARKET OB/XF VALUE		3,435
TOTAL LAND VALUE - MARKET		200,000
TOTAL MARKET VALUE		670,395
SOH/AGL Deduction		211,637
ASSESSED VALUE		458,758
TOTAL EXEMPTION VALUE	HX HB	50,000
BASE TAXABLE VALUE		408,758
TOTAL JUST VALUE		670,395
NCON VALUE		0
INCOME VALUE		
PREVIOUS YEAR MKT VALUE		617,732

PERMIT NUM	DESCRIPTION	AMT	ISSUED
20112101	DUMPSTER IN ROAD	0	11/21/2011
20111669	ADDITION TO MAIN	175,000	09/12/2011
20111318	TEMP POLE FOR REN	250	08/08/2011
20111309	DEMOLISH CHIM/PAN	2,000	08/05/2011
20101432	H/AC	800	08/27/2010
20101434	ELEC.FOR STORAGE	3,000	08/27/2010

SALES DATA

OFF RECORD Number	DATE	TYPE INST	Q U	V I	RSN CD	SALE PRICE
1555/0248	3/10/2008	WD	Q	I		265,000
GRANTOR: HOWARD KENNETH W						
GRANTEE: ROSS RONALD J & FAI						
1393/1870	3/07/2006	WD	Q	I		309,000
GRANTOR: STROZINSKY JAMES J &						
GRANTEE: HOWARD KENNETH W						

BUILDING NOTES

BUILDING DIMENSIONS

HXG=[YR=2010] W26 S16 E26 N2 HXO=[YR=2010] E3 N4 W3 S4$ N14$ PTR= N10 FOP=[YR=2010] N6 APT=[YR=2010] N16W26 S16E26$W26S6E26$ S10$.

EXTRA FEATURES

L N	OB/XF CODE	DESCRIPTION	BLD	CAP	L	W	UNITS	UT	Adj R	ADJ UNIT PRICE	ORIG COND	YEAR ON	YEAR ACTUAL	Q	% COND	OB/XF MKT VALUE	NOTES

LAND DESCRIPTION

TOTAL OB/XF 0

L N	USE CODE	CLS	LAND USE DESCRIPTION	CAP	R D	LOC ZONE	FRONT	DEPTH	TOT LND UTS	UNIT TYPE	D T	DPTH FACT	% COND	TOT ADJ	UNIT PRICE	ADJ UNIT PRICE	LAND VALUE	OTHER ADJUSTMENTS AND NOTES	YEAR	DENSITY	DECL	FRZ	YR	CONSRV

REVIEW DATE 12/30/2019 BY DJA Total Acres: 0.00 Total Land Value: 200,000 Market: 0 Agricultural: 0 Common: 200,000 PRINTED 08/06/2024 BY SYS