BLOCK 13 LOT 30 W 10 FT OF 29
& W 35 FT OF 26
IN OR 2074/857

316 CENTRE STREET LLC
960194 GATEWAY BLVD STE 101
FERNANDINA BEACH, FL 32034

2024

00-00-31-1800-0013-0300

NASSAU COUNTY PROPERTY

BUILDING CHARACTERISTICS

ELEMENT	CD	CONSTRUCTION
Exterior Wall	19	COMMON BRK 100
Roof Structur	04	WOOD TRUSS 100
Roof Cover	04	BUILT-UP 100
Interior Wall	05	DRYWALL 60
Interior Wall	08	DECORATIVE 40
Interior Floo	03	CONC FINSH 50
Interior Floo	12	HARDWOOD 50
Ceiling	02	F.NOT SUS 100
Air Condition	03	CENTRAL 100
Heating Type	04	AIR DUCTED 100
Fixtures		9 100
Frame	03	MASONRY 100
Story Height		13 100
RMS		6 100
Stories	2.	2. 100
Units		0 100
BUD8 Adjustme	02	DIST FB 100
Occupancy	00	NONE 100
Quality	04	Quality Level 04

DOR CODE	1100	STORES, 1 STORY	
MAP NUM		MKT AREA	01
NEIGHBORHOOD/LOC	1002.0200		

AREA TYPE	TOTAL GROSS AREA	PCT OF BASE	TOT ADJ AREA	SUBAREA MARKET VALUE
BAS	1,375	100	1,375	188,747
CAN	125	30	38	5,216
FUS	1,500	100	1,500	205,906
TOTALS	3,000		2,913	399,869

MARKET ADJUSTMENTS

TYPE	MDL	EFF. AREA	TOT ADJ PTS	EFF. BASE RATE	REPL. COST NEW	AYB	EYB	ECON	FNCT		NORM	% COND
1101	04	2,913	121.9390	173.76	506,163	1900	2000	0	0	0	21.00	79.00

1 RETAILSTOR – 0% - 0 Heated Area: 2875 HX Base Yr

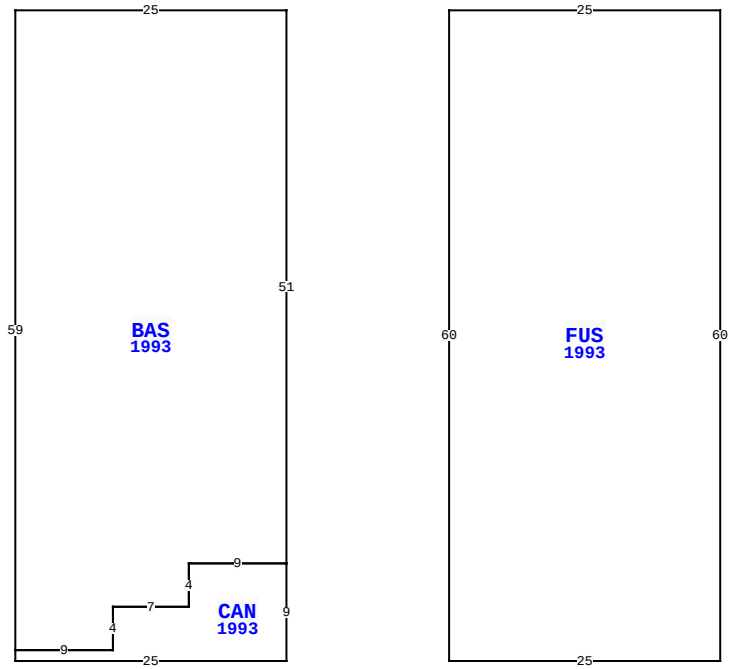

316 CENTRE ST, FERNANDINA BEACH

BLD DATE	05/20/2022	KK	LGL DATE	
XF DATE	05/20/2022	KK	LAND DATE	05/20/2022 KK
INC DATE			AG DATE	

VALUATION SUMMARY

VALUATION BY	STANDARD
Tax Group: 2	Tax Dist:
BUILDING MARKET VALUE	887,616
TOTAL MARKET OB/XF VALUE	108,429
TOTAL LAND VALUE - MARKET	437,500
TOTAL MARKET VALUE	1,433,545
SOH/AGL Deduction	0
ASSESSED VALUE	1,433,545
TOTAL EXEMPTION VALUE	0
BASE TAXABLE VALUE	1,433,545
TOTAL JUST VALUE	1,433,545
NCON VALUE	0
INCOME VALUE	591,023
PREVIOUS YEAR MKT VALUE	1,469,752

PERMIT NUM	DESCRIPTION	AMT	ISSUED
20210164	BLD OUT-SPICE & T	50,000	03/17/2021
20190026	REMODEL	1,500,000	05/15/2019
20172104	REMODEL	915,362	07/11/2017
20151358	ALLEY CAT (SIGN)	250	06/12/2015
20142205	REPAIR/RRF	8,000	10/10/2014
20140932	ELEC OTHER	500	05/07/2014

SALES DATA

OFF RECORD Number	DATE	TYPE INST	Q / U	V / I	RSN CD	SALE PRICE
2074/0857	9/27/2016	WD	Q	I	01	979,000
GRANTOR: HILL BARBARA C						
GRANTEE: 316 CENTRE STREET L						
2074/0855	9/22/2016	QC	U	I	11	100
GRANTOR: COX GEORGE FERGUSON						
GRANTEE: HILL BARBARA C						

BUILDING NOTES

BUILDING DIMENSIONS

BAS=[YR=1993] W25 S59 CAN=[YR=1993] S1 E25 N9 W9 S4 W7 S4 W9$ E9 N4 E7 N4 E9 N51$ PTR= E15 FUS=[YR=1993] E25 S60 W25 N60$ W15$.

EXTRA FEATURES

LN	OB/XF CODE	DESCRIPTION	BLD	CAP	L	W	UNITS	UT	Adj R	ADJ UNIT PRICE	ORIG COND	YEAR ON	YEAR ACTUAL	Q	% COND	OB/XF MKT VALUE	NOTES
1	0810	CONCRETE A	0	0	0	0	234.00	SF	6.50	6.50	100	2020	2020	3	99	1,506	
2	0097	AWNING CN	0	0	0	0	14.00	SF	65.00	65.00	100	2021	2021	3	95	865	
3	0097	AWNING CN	0	0	0	0	6.00	SF	65.00	65.00	100	2021	2021	3	95	371	
4	0410	ELEVATOR	0	0	0	0	1.00	UT	55,000.00	55,000.00	100	2021	2021	3	100	55,000	
5	0141	BAR TOP L	0	0	0	0	16.00	LF	86.00	86.00	100	2021	2021	3	93	1,280	
6	0966	FIRE SPRNK	0	0	0	0	2,875.00	SF	3.00	3.00	100	2021	2021	3	99	8,539	
7	0966	FIRE SPRNK	0	0	0	0	3,327.00	SF	3.00	3.00	100	2021	2021	3	99	9,881	
8	0383	FREEZER	0	0	8	7	56.00	SF	105.00	105.00	100	2021	2021	3	98	5,762	
9	0381	COOLER	0	0	0	0	144.00	SF	82.50	82.50	100	2021	2021	3	98	11,642	
10	0381	COOLER	0	0	14	12	168.00	SF	82.50	82.50	100	2021	2021	3	98	13,583	

TOTAL OB/XF 108,429

LAND DESCRIPTION

LN	USE CODE	CLS	LAND USE DESCRIPTION	CAP	RD	LOC ZONE	FRONT	DEPTH	TOT LND UTS	UNIT TYPE	DT	DPTH FACT	% COND	TOT ADJ	UNIT PRICE	ADJ UNIT PRICE	LAND VALUE	OTHER ADJUSTMENTS AND NOTES	YEAR	DENSITY	DECL	FRZ	YR	CONSRV
1	001100	C	STORE 1FLR	0	0003	C-3	35.00	125.00	4,375.00	SF		1.00	1.00	1.00	100.00	100.00	437,500							

REVIEW DATE 05/20/2022 BY KK Total Acres: 0.00 Total Land Value: 437,500 Market: 0 Agricultural: 0 Common: 437,500 PRINTED 08/06/2024 BY SYS

BLOCK 13 LOT 30 W 10 FT OF 29
& W 35 FT OF 26
IN OR 2074/857

316 CENTRE STREET LLC
960194 GATEWAY BLVD STE 101
FERNANDINA BEACH, FL 32034

2024

00-00-31-1800-0013-0300

BUILDING CHARACTERISTICS

ELEMENT	CD	CONSTRUCTION
Exterior Wall	17	CB STUCCO 100
Roof Structur	04	WOOD TRUSS 100
Roof Cover	04	BUILT-UP 100
Interior Wall	05	DRYWALL 100
Interior Floo	03	CONC FINSH 50
Interior Floo	15	HARDTILE 50
Ceiling	03	PART.FIN. 100
Air Condition	04	ROOF TOP 100
Heating Type	04	AIR DUCTED 100
Fixtures		14 100
Frame	03	MASONRY 100
Story Height		13 100
RMS		6 100
Stories	2.	2. 100
Units		0 100
Occupancy	00	NONE 100
Quality	04	Quality Level 04
DOR CODE	1100	STORES, 1 STORY
MAP NUM		MKT AREA 01
NEIGHBORHOOD/LOC	1002.0200	

AREA TYPE	TOTAL GROSS AREA	PCT OF BASE	TOT ADJ AREA	SUBAREA MARKET VALUE
BAL	252	15	38	5,566
BAS	115	100	115	16,844
BAS	186	100	186	27,244
BAS	594	100	594	87,003
BAS	600	100	600	87,882
BAS	899	100	899	131,677
CAN	20	30	6	879
FST	16	50	8	1,172
FUS	186	100	186	27,244
FUS	495	100	495	72,503
TOTALS	3,897		3,330	487,747

MARKET ADJUSTMENTS

TYPE	MDL	EFF. AREA	TOT ADJ PTS	EFF. BASE RATE	REPL. COST NEW	AYB	EYB	ECON	FNCT		NORM	% COND
3301	04	3,330	122.5224	147.95	492,674	2021	2021	0	0	0	1.00	99.00

2 BARS - 0% - 0 Heated Area: 3075 HX Base Yr

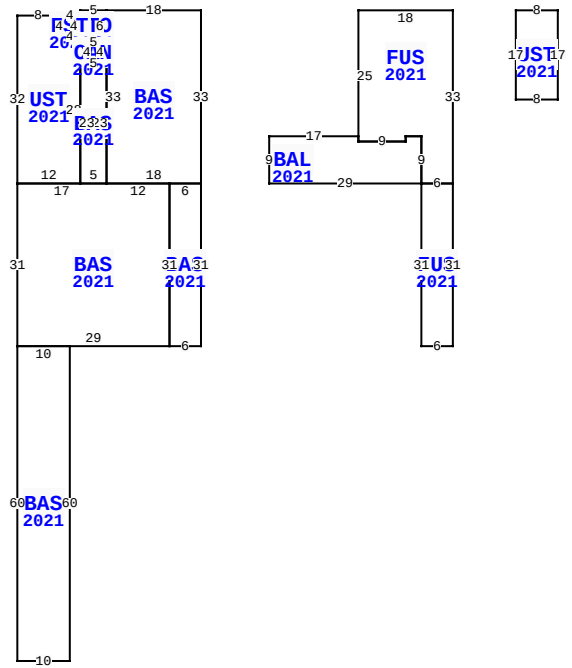

** This building has 13 Sub-Areas

316 CENTRE ST, FERNANDINA BEACH

BLD DATE	05/20/2022	KK	LGL DATE	
XF DATE	05/20/2022	KK	LAND DATE	05/20/2022 KK
INC DATE			AG DATE	

NASSAU COUNTY PROPERTY

VALUATION SUMMARY

VALUATION BY	STANDARD
Tax Group: 2	Tax Dist:
BUILDING MARKET VALUE	887,616
TOTAL MARKET OB/XF VALUE	108,429
TOTAL LAND VALUE - MARKET	437,500
TOTAL MARKET VALUE	1,433,545
SOH/AGL Deduction	0
ASSESSED VALUE	1,433,545
TOTAL EXEMPTION VALUE	0
BASE TAXABLE VALUE	1,433,545
TOTAL JUST VALUE	1,433,545
NCON VALUE	0
INCOME VALUE	591,023
PREVIOUS YEAR MKT VALUE	1,469,752

PERMIT NUM	DESCRIPTION	AMT	ISSUED
20140046	SIGNS	150	01/09/2014
20130734	CHNGE SRVC	135	04/08/2013
20120416	SIGN	340	03/15/2012
20062075	H/AC	1,500	09/09/2006
20060157	REPAIR/RRF	10,000	01/21/2006
20051241	SIGN	90	02/22/2005

SALES DATA

OFF RECORD Number	DATE	TYPE INST	Q / U	V / I	RSN CD	SALE PRICE
2074/0857	9/27/2016	WD	Q	I	01	979,000
GRANTOR: HILL BARBARA C						
GRANTEE: 316 CENTRE STREET L						
2074/0855	9/22/2016	QC	U	I	11	100
GRANTOR: COX GEORGE FERGUSON						
GRANTEE: HILL BARBARA C						

BUILDING NOTES

BUILDING DIMENSIONS

BAS=[YR=2021] W18 PTO=[YR=2021] W5 S1 FST=[YR=2021] W4 UST=[YR=2021] W8 S32 BAS=[YR=2021] S31 BAS=[YR=2021] S60 E10 N60 W10$ E29 BAS=[YR=2021] E6 N31 W6 S31$ N31 W12 BAS=[YR=2021] N23 CAN=[YR=2021] N4 W5 S4 E5$ W5 S23 E5$ W17$ E12 N28 W4 N4$ S4 E4 N4$ S5 E5 N6$ S33 E18 N33$ PTR= E30 FUS=[YR=2021] E18 S33 FUS=[YR=2021] S31 W6 N31 E6$ W6 BAL=[YR=2021] W29 N9 E17 S1 E9 N1 E3 S9$ N9 W3 S1 W9 N25$ W30$ PTR= E60 UST=[YR=2021] E8 S17 W8 N17$ W60$.

EXTRA FEATURES

L N	OB/XF CODE	DESCRIPTION	BLD	CAP	L	W	UNITS	UT	Adj R	ADJ UNIT PRICE	ORIG COND	YEAR ON	YEAR ACTUAL	Q	% COND	OB/XF MKT VALUE	NOTES

LAND DESCRIPTION

TOTAL OB/XF 0

L N	USE CODE	CLS	LAND USE DESCRIPTION	CAP	R D	LOC ZONE	FRONT	DEPTH	TOT LND UTS	UNIT TYPE	D T	DPTH FACT	% COND	TOT ADJ	UNIT PRICE	ADJ UNIT PRICE	LAND VALUE	OTHER ADJUSTMENTS AND NOTES	YEAR	DENSITY	DECL	FRZ	YR	CONSRV

REVIEW DATE 05/20/2022 BY KK Total Acres: 0.00 Total Land Value: 437,500 Market: 0 Agricultural: 0 Common: 437,500 PRINTED 08/06/2024 BY SYS