BLOCK 10 LOTS 27 & 28
IN OR 1709/1216
CITY OF FDNA BEACH

WHITAKER ROBERT F LIVING TRUST/WHITAKER MELBA P TR
222 LIGHTHOUSE CIR
FERNANDINA BEACH, FL 32034

2024

00-00-31-1800-0010-0270

BUILDING CHARACTERISTICS

ELEMENT	CD	CONSTRUCTION
Exterior Wall	19	COMMON BRK 100
Roof Structur	04	WOOD TRUSS 100
Roof Cover	04	BUILT-UP 100
Interior Wall	05	DRYWALL 50
Interior Wall	06	CUST PANEL 50
Interior Floo	14	CARPET 100
Ceiling	01	FIN.SUSPD 100
Air Condition	04	ROOF TOP 100
Heating Type	04	AIR DUCTED 100
Fixtures		10 100
Frame	03	MASONRY 100
Story Height		16 100
RMS		13 100
Stories	1.5	1.5 100
Units		0 100
BUD8 Adjustme	02	DIST FB 100
Occupancy	OO	OWNER OCC 100
Quality	04	Quality Level 04
DOR CODE	1200	STORE/OFFICE/RESID
MAP NUM		MKT AREA 01
NEIGHBORHOOD/LOC	1002.0200	

AREA TYPE	TOTAL GROSS AREA	PCT OF BASE	TOT ADJ AREA	SUBAREA MARKET VALUE
AOF	175	100	175	15,698
AOF	719	100	719	64,495
AOF	2,725	100	2,725	244,433
BAS	1,738	100	1,738	155,899
BAS	1,978	100	1,978	177,427
FOP	12	30	4	359
FOP	18	30	5	449
SFB	60	80	48	4,306
SFB	425	80	340	30,498
UUS	300	50	150	13,455
TOTALS	8,150		7,882	707,016

MARKET ADJUSTMENTS

TYPE	MDL	EFF. AREA	TOT ADJ PTS	EFF. BASE RATE	REPL. COST NEW	AYB	EYB	ECON	FNCT		NORM	% COND
1101	04	7,882	125.8950	179.40	1,414,031	1911	1985	0	0	0	50.00	50.00

1 RETAILSTOR – 0% - 0 Heated Area: 7723 HX Base Yr

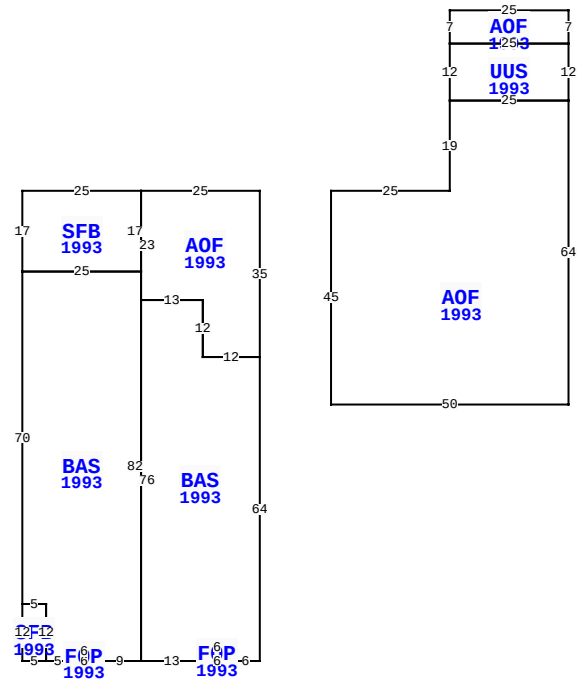

217 CENTRE ST, FERNANDINA BEACH

BLD DATE	10/01/2021	KK	LGL DATE	
XF DATE	10/01/2021	KK	LAND DATE	10/01/2021 KK
INC DATE			AG DATE	

NASSAU COUNTY PROPERTY

PAGE 1 of 1 2

VALUATION SUMMARY

VALUATION BY		STANDARD
Tax Group: 2	Tax Dist:	
BUILDING MARKET VALUE		707,016
TOTAL MARKET OB/XF VALUE		2,600
TOTAL LAND VALUE - MARKET		500,000
TOTAL MARKET VALUE		1,209,616
SOH/AGL Deduction		175,807
ASSESSED VALUE		1,033,809
TOTAL EXEMPTION VALUE	HI	0
BASE TAXABLE VALUE		1,033,809
TOTAL JUST VALUE		1,209,616
NCON VALUE		0
INCOME VALUE		
PREVIOUS YEAR MKT VALUE		1,229,478

PERMIT NUM	DESCRIPTION	AMT	ISSUED
20210068	ROOF	0	08/10/2021
20141482	217 CENTRE ST	2,200	07/08/2014
20141483	217 CENTRE ST	1,115	07/08/2014
20141484	215 CENTRE ST	2,200	07/08/2014
20111138	H/AC	0	07/13/2011
20110313	ELEC OTHER	100	03/04/2011

SALES DATA

OFF RECORD Number	DATE	TYPE INST	Q U	V I	RSN CD	SALE PRICE
1709/1216	11/11/2010	WD	U	I	11	100
GRANTOR: WHITAKER ROBERT F						
GRANTEE: WHITAKER MELBA P &						
0763/0238	6/17/1996	WD	U	I	19	150,000
GRANTOR: MITCHELL F & WHITAKER						
GRANTEE: WHITAKER ROBERT F						

BUILDING NOTES

BUILDING DIMENSIONS

AOF=[YR=1993] W25 SFB=[YR=1993] W25 S17 BAS=[YR=1993] S70 SFB=[YR=1993] S12 E5 N12 W5 $ E5 S12 E5 FOP=[YR=1993] E6 N2 W6 S2 $ N2 E6 S2 E9 N82 W25 $ E25 N17 $ S23 BAS=[YR=1993] S76 E13 FOP=[YR=1993] E6 N3 W6 S3 $ N3 E6 S3 E6 N64 W12 N12 W13 $ E13 S12 E12 N35 $ PTR= E15 AOF=[YR=1993] E25 N19 UUS=[YR=1993] N12 AOF=[YR=1993] N7 E25 S7 W25 $ E25 S12 W25 $ E25 S64 W50 N45 $ W15 $.

EXTRA FEATURES

LN	OB/XF CODE	DESCRIPTION	BLD	CAP	L	W	UNITS	UT	Adj R	ADJ UNIT PRICE	ORIG COND	YEAR ON	YEAR ACTUAL	Q	% COND	OB/XF MKT VALUE	NOTES
1	0097	AWNING CN	0	0	0	0	50.00	SF	130.00	130.00	100	1993	1993	3	40	2,600	

LAND DESCRIPTION

TOTAL OB/XF 2,600

LN	USE CODE	CLS	LAND USE DESCRIPTION	CAP	RD	LOC ZONE	FRONT	DEPTH	TOT LND UTS	UNIT TYPE	DT	DPTH FACT	% COND	TOT ADJ	UNIT PRICE	ADJ UNIT PRICE	LAND VALUE	OTHER ADJUSTMENTS AND NOTES	YEAR	DENSITY	DECL	FRZ	YR	CONSRV
1	001200	C	STORE COMB	0	0003	C-3	50.00	100.00	5,000.00	SF		1.00	1.00	1.00	100.00	100.00	500,000							

REVIEW DATE 10/01/2021 BY KK Total Acres: 0.00 Total Land Value: 500,000 Market: 0 Agricultural: 0 Common: 500,000 PRINTED 08/06/2024 BY SYS