BLOCK 9 ALL OF LOTS 27 & 28
IN OR 1960/834
ESMT PT OR 2214/1119

BIMBI LLC
109 N 3RD ST
FERNANDINA BEACH, FL 32034

2024

00-00-31-1800-0009-0270

NASSAU COUNTY PROPERTY

BUILDING CHARACTERISTICS

ELEMENT	CD	CONSTRUCTION
Exterior Wall	16	WD FR STUC 70
Exterior Wall	17	CB STUCCO 30
Roof Structur	04	WOOD TRUSS 100
Roof Cover	11	SLATE 100
Interior Wall	05	DRYWALL 100
Interior Floo	03	CONC FINSH 70
Interior Floo	15	HARDTILE 30
Ceiling	01	FIN.SUSPD 100
Air Condition	03	CENTRAL 100
Heating Type	04	AIR DUCTED 100
Fixtures		14 100
Frame	02	WOOD FRAME 100
Story Height		12 100
RMS		6 100
Stories	1.	1. 100
Units		0 100
Occupancy	00	NONE 100
Quality	03	Quality Level 03
DOR CODE	2100	RESTAURANTS/CAFE
MAP NUM		MKT AREA 01
NEIGHBORHOOD/LOC	1010.00	

AREA TYPE	TOTAL GROSS AREA	PCT OF BASE	TOT ADJ AREA	SUBAREA MARKET VALUE
BAS	560	100	560	84,331
BAS	483	100	483	72,736
BAS	240	100	240	36,142
BAS	422	100	422	63,550
BAS	1,162	100	1,162	174,988
STR	108	10	11	1,657
UST	1,584	40	634	95,475
TOTALS	4,559		3,512	528,879

MARKET ADJUSTMENTS

TYPE	MDL	EFF. AREA	TOT ADJ PTS	EFF. BASE RATE	REPL. COST NEW	AYB	EYB	ECON	FNCT		NORM	% COND
2101	04	3,512	109.2830	188.24	661,099	1987	2001	0	0	0	20.00	80.00

1 RSTARANT 1 – 0% - 0 Heated Area: 2867 HX Base Yr

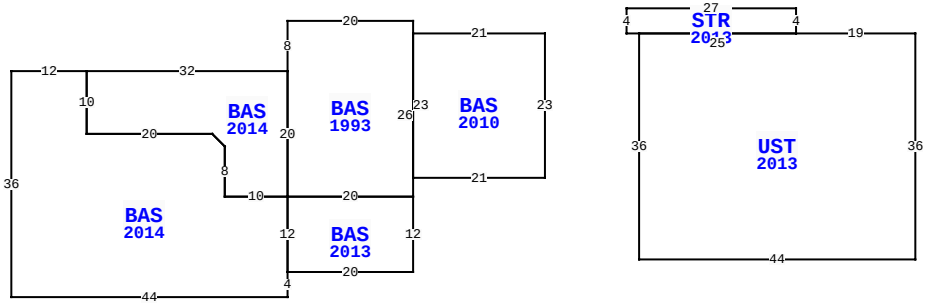

109 N 3RD ST, FERNANDINA BEACH

BLD DATE	12/28/2021 KK	LGL DATE	
XF DATE	12/28/2021 KK	LAND DATE	12/28/2021 KK
INC DATE		AG DATE	

NASSAU COUNTY PROPERTY — VALUATION SUMMARY

VALUATION BY	STANDARD
Tax Group: 2	Tax Dist:
BUILDING MARKET VALUE	528,879
TOTAL MARKET OB/XF VALUE	10,678
TOTAL LAND VALUE - MARKET	200,000
TOTAL MARKET VALUE	739,557
SOH/AGL Deduction	262,615
ASSESSED VALUE	476,942
TOTAL EXEMPTION VALUE	0
BASE TAXABLE VALUE	476,942
TOTAL JUST VALUE	739,557
NCON VALUE	0
INCOME VALUE	
PREVIOUS YEAR MKT VALUE	768,756

PERMIT NUM	DESCRIPTION	AMT	ISSUED
20170486	REMODEL	1,500	02/22/2017
20140507	REMODEL	600	03/14/2014
20131357	H/AC	19,800	06/14/2013
20130552	REMODEL	5,500	03/19/2013
20130502	REMODEL	9,700	03/12/2013
20130410	ADDITION	186,000	03/01/2013

SALES DATA

OFF RECORD Number	DATE	TYPE INST	Q U	V I	RSN CD	SALE PRICE
1960/0834	1/30/2015	WD	U	I	30	90,000
GRANTOR: TIZZANO ANTONINO & KA						
GRANTEE: BIMBI LLC						
1342/1587	8/17/2005	WD	Q	I		285,000
GRANTOR: DOWN UNDER MARINA RES						
GRANTEE: TIZZANO ANTONINO						

BUILDING NOTES

BUILDING DIMENSIONS

BAS=[YR=2010] W21 BAS=[YR=1993] N2 W20 S8 BAS=[YR=2014] W32 BAS=[YR=2014] W12 S36 E44 N4 BAS=[YR=2013] E20 N12 W20 S12$ N12 W10 N8 U2 L2 W20 N10$ S10 E20 D2 R2 S8 E10 N20$ S20 E20 N26$ S23 E21 N23$ PTR= E40 UST=[YR=2013] E19 S36 W44 N36 STR=[YR=2013] W2 N4 E27 S4 W25$ E25$ W40$.

EXTRA FEATURES

LN	OB/XF CODE	DESCRIPTION	BLD	CAP	L	W	UNITS	UT	Adj R	ADJ UNIT PRICE	ORIG COND	YEAR ON	YEAR ACTUAL	Q	% COND	OB/XF MKT VALUE	NOTES
1	0446	BOX FNC 6'	0	0	0	0	19.00	LF	20.00	20.00	100	2007	2007	3	31	118	
2	0855	CONC PAVER	0	0	0	0	495.00	SF	10.00	10.00	100	2007	2007	3	88	4,356	
3	0810	CONCRETE A	0	0	24	5	120.00	SF	6.50	6.50	100	2006	2006	3	87	679	
4	0855	CONC PAVER	0	0	11	10	110.00	SF	10.00	10.00	100	2013	2013	3	94	1,034	
5	0810	CONCRETE A	0	0	0	0	79.00	SF	6.50	6.50	100	2000	2000	3	79	406	
6	0446	BOX FNC 6'	0	0	0	0	71.00	LF	20.00	20.00	100	2007	2007	3	31	440	
7	0445	BOX FNC 5'	0	0	0	0	4.00	LF	8.10	8.10	100	2007	2007	3	31	10	
8	0976	DECORATIVE	0	0	0	0	5.00	UT	125.00	125.00	100	2013	2013	3	85	531	
9	0446	BOX FNC 6'	0	0	0	0	14.00	LF	20.00	20.00	100	2013	2013	3	60	168	
10	0463	FENCE GATE	0	0	0	0	1.00	UT	300.00	300.00	100	2013	2013	3	85	255	

TOTAL OB/XF 7,997

LAND DESCRIPTION

LN	USE CODE	CLS	LAND USE DESCRIPTION	CAP	RD	LOC ZONE	FRONT	DEPTH	TOT LND UTS	UNIT TYPE	DT	DPTH FACT	% COND	TOT ADJ	UNIT PRICE	ADJ UNIT PRICE	LAND VALUE	OTHER ADJUSTMENTS AND NOTES	YEAR	DENSITY	DECL	FRZ	YR	CONSRV
1	002100	C	RESTAURANT	0	0003	C-3	50.00	50.00	5,000.00	SF		1.00	1.00	1.00	40.00	40.00	200,000							

REVIEW DATE 12/28/2021 BY KK Total Acres: 0.00 Total Land Value: 200,000 Market: 0 Agricultural: 0 Common: 200,000 PRINTED 08/06/2024 BY SYS

BLOCK 9 ALL OF LOTS 27 & 28
IN OR 1960/834
ESMT PT OR 2214/1119

BIMBI LLC
109 N 3RD ST
FERNANDINA BEACH, FL 32034

2024

00-00-31-1800-0009-0270

NASSAU COUNTY PROPERTY

BUILDING CHARACTERISTICS

ELEMENT	CD	CONSTRUCTION

DOR CODE	2100	RESTAURANTS/CAFE	
MAP NUM		MKT AREA	01
NEIGHBORHOOD/LOC	1010.00		

AREA TYPE	TOTAL GROSS AREA	PCT OF BASE	TOT ADJ AREA	SUBAREA MARKET VALUE
TOTALS				

MARKET ADJUSTMENTS

TYPE	MDL	EFF. AREA	TOT ADJ PTS	EFF. BASE RATE	REPL. COST NEW	AYB	EYB	ECON	FNCT		NORM	% COND

VALUATION SUMMARY

VALUATION BY	STANDARD
Tax Group: 2	Tax Dist:
BUILDING MARKET VALUE	528,879
TOTAL MARKET OB/XF VALUE	10,678
TOTAL LAND VALUE - MARKET	200,000
TOTAL MARKET VALUE	739,557
SOH/AGL Deduction	262,615
ASSESSED VALUE	476,942
TOTAL EXEMPTION VALUE	0
BASE TAXABLE VALUE	476,942
TOTAL JUST VALUE	739,557
NCON VALUE	0
INCOME VALUE	
PREVIOUS YEAR MKT VALUE	768,756

PERMIT NUM	DESCRIPTION	AMT	ISSUED
20130018	OTHER	2,000	01/03/2013
20101439	REMODEL	6,000	08/30/2010
20101433	ELEC OTHER	200	08/27/2010
20101210	REMODEL	15,000	07/23/2010
20080706	ELEC OTHER	100	04/29/2008
20080704	XFOB	2,000	04/28/2008

SALES DATA

OFF RECORD Number	DATE	TYPE INST	Q U /	V I /	RSN CD	SALE PRICE
1960/0834	1/30/2015	WD	U	I	30	90,000
GRANTOR: TIZZANO ANTONINO & KA						
GRANTEE: BIMBI LLC						
1342/1587	8/17/2005	WD	Q	I		285,000
GRANTOR: DOWN UNDER MARINA RES						
GRANTEE: TIZZANO ANTONINO						

BLD DATE	12/28/2021	KK	LGL DATE	
XF DATE	12/28/2021	KK	LAND DATE	12/28/2021 KK
INC DATE			AG DATE	

BUILDING NOTES

EXTRA FEATURES

LN	OB/XF CODE	DESCRIPTION	BLD	CAP	L	W	UNITS	UT	Adj R	ADJ UNIT PRICE	ORIG COND	YEAR ON	YEAR ACTUAL	Q	% COND	OB/XF MKT VALUE	NOTES
11	0446	BOX FNC 6'	0	0	0	0	29.00	LF	20.00	20.00	100	2013	2013	3	60	348	
12	0418	EXHST FAN	0	0	0	0	1.00	UT	400.00	400.00	100	2013	2013	3	60	240	
13	0504	FP-ELECTRI	0	0	0	0	1.00	UT	2,000.00	2,000.00	100	2013	2013	3	96	1,920	
14	1242	WD DECK A	0	0	16	4	64.00	SF	10.00	10.00	100	2006	2006	3	27	173	

BUILDING DIMENSIONS

LAND DESCRIPTION

TOTAL OB/XF 2,681

LN	USE CODE	CLS	LAND USE DESCRIPTION	CAP	RD	LOC ZONE	FRONT	DEPTH	TOT LND UTS	UNIT TYPE	DT	DPTH FACT	% COND	TOT ADJ	UNIT PRICE	ADJ UNIT PRICE	LAND VALUE	OTHER ADJUSTMENTS AND NOTES	YEAR	DENSITY	DECL	FRZ	YR	CONSRV

REVIEW DATE 12/28/2021 BY KK Total Acres: 0.00 Total Land Value: 200,000 Market: 0 Agricultural: 0 Common: 200,000 PRINTED 08/06/2024 BY SYS