BLOCK 8 LOT 4 & N1/2 OF LOT 3
CITY OF FDNA BEACH
ESMT IN OR 2619-934

JOHNSON CRAIG & ROBIN
216 N 2ND ST
FERNANDINA BEACH, FL 32034

2024

00-00-31-1800-0008-0030

NASSAU COUNTY PROPERTY

BUILDING CHARACTERISTICS

ELEMENT	CD	CONSTRUCTION
Exterior Wall	10	ABOVE AVG 50
Exterior Wall	16	WD FR STUC 50
Roof Structur	03	GABLE/HIP 100
Roof Cover	12	MODULAR MT 100
Interior Wall	05	DRYWALL 100
Interior Floo	11	CLAY TILE 70
Interior Floo	14	CARPET 30
Air Condition	03	CENTRAL 100
Heating Type	04	AIR DUCTED 100
Bedrooms		4 100
Bathrooms		4 100
Frame	02	WOOD FRAME 100
Quality	03	Quality Level 03
DOR CODE	0100	SINGLE FAMILY
MAP NUM		MKT AREA 01
NEIGHBORHOOD/LOC	1004.00	

AREA TYPE	TOTAL GROSS AREA	PCT OF BASE	TOT ADJ AREA	SUBAREA MARKET VALUE
BAS	1,176	100	1,176	326,834
DCK	80	10	8	2,223
FGR	528	55	290	80,597
FOP	240	30	72	20,010
FOP	240	30	72	20,010
FOP	264	30	79	21,956
FST	60	55	33	9,171
FST	324	55	178	49,470
FUS	432	100	432	120,061
FUS	1,176	100	1,176	326,834
TOTALS	4,520		3,516	977,167

MARKET ADJUSTMENTS

TYPE	MDL	EFF. AREA	TOT ADJ PTS	EFF. BASE RATE	REPL. COST NEW	AYB	EYB	ECON	FNCT		NORM	% COND
0500	12	3,516	185.2830	277.92	977,167	2023	2023	0	0	0	0.00	100.00

1 SFR CUST – 100% - 2024 Heated Area: 2784 HX Base Yr 2024

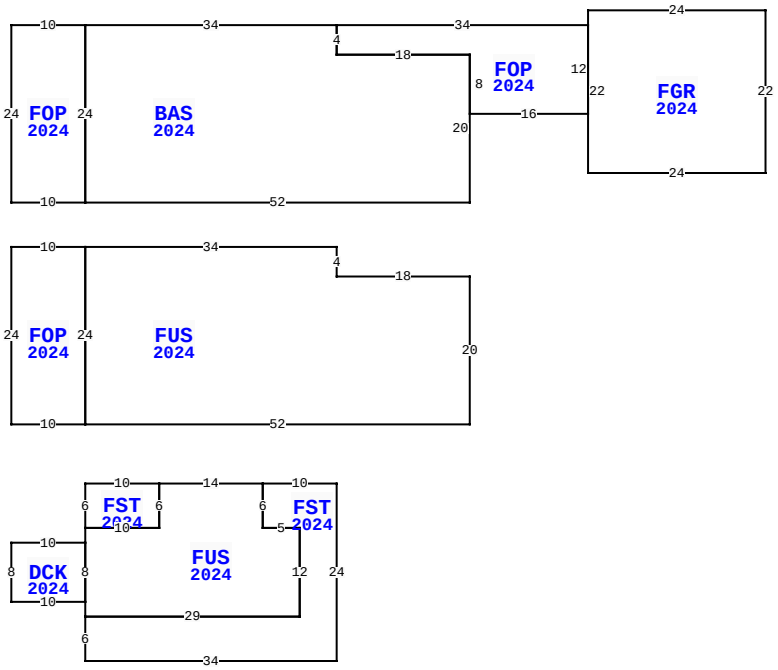

216 N 2ND ST, FERNANDINA BEACH

BLD DATE		LGL DATE	
XF DATE		LAND DATE	
INC DATE		AG DATE	

VALUATION SUMMARY

VALUATION BY		STANDARD
Tax Group: 2	Tax Dist:	
BUILDING MARKET VALUE		977,167
TOTAL MARKET OB/XF VALUE		6,375
TOTAL LAND VALUE - MARKET		187,480
TOTAL MARKET VALUE		1,171,022
SOH/AGL Deduction		0
ASSESSED VALUE		1,171,022
TOTAL EXEMPTION VALUE	HX HB	50,000
BASE TAXABLE VALUE		1,121,022
TOTAL JUST VALUE		1,171,022
NCON VALUE		983,542
INCOME VALUE		
PREVIOUS YEAR MKT VALUE		140,610

PERMIT NUM	DESCRIPTION	AMT	ISSUED
2021-1340	CO		10/16/2023
20211340	NEW CONSTR	412,423	06/28/2021

SALES DATA

OFF RECORD Number	DATE	TYPE INST	Q / U	V / I	RSN CD	SALE PRICE
2690/802	1/17/2024	SW	U	I	11	100
GRANTOR: ARTISAN RE PARTNERS L						
GRANTEE: JOHNSON CRAIG & ROB						
2677/671	10/31/2023	SW	Q	I	01	1,250,000
GRANTOR: ARTISAN RE PARTNERS L						
GRANTEE: JOHNSON CRAIG & ROB						

BUILDING NOTES

EXTRA FEATURES

LN	OB/XF CODE	DESCRIPTION	BLD	CAP	L	W	UNITS	UT	Adj R	ADJ UNIT PRICE	ORIG COND	YEAR ON	YEAR ACTUAL	Q	% COND	OB/XF MKT VALUE	NOTES
1	0811	CONCRETE B	0	100	0	0	1,226.00	SF	5.20	5.20	100	2024	2023		100	6,375	

BUILDING DIMENSIONS

```
FOP=[YR=2024;ORIG=10,10] E10 S24 W10 N24 $
BAS=[YR=2024;ORIG=20,10] E34 S4 E18 S20 W52 N24 $
FOP=[YR=2024;ORIG=54,10] E34 S12 W16 N8 W18 N4 $
FGR=[YR=2024;ORIG=88,8] E24 S22 W24 N22 $
FOP=[YR=2024;ORIG=10,40] E10 S24 W10 N24 $
FUS=[YR=2024;ORIG=20,40] E34 S4 E18 S20 W52 N24 $
DCK=[YR=2024;ORIG=10,80] E10 S8 W10 N8 $
FUS=[YR=2024;ORIG=20,78] S2 S8 S2 E29 N12 W5 N6 W14 S6 W10 $
FST=[YR=2024;ORIG=20,72] E10 S6 W10 N6 $
FST=[YR=2024;ORIG=44,78] N6 E10 S24 W34 N6 E29 N12 W5 $
.
```

LAND DESCRIPTION

TOTAL OB/XF 6,375

LN	USE CODE	CLS	LAND USE DESCRIPTION	CAP	RD	LOC ZONE	FRONT	DEPTH	TOT LND UTS	UNIT TYPE	DT	DPTH FACT	% COND	TOT ADJ	UNIT PRICE	ADJ UNIT PRICE	LAND VALUE	OTHER ADJUSTMENTS AND NOTES	YEAR	DENSITY	DECL	FRZ	YR	CONSRV
1	001000	C	COMMERCIAL	100		C-3	37.00	125.00	4,687.00	SF		1.00	1.00	1.00	40.00	40.00	187,480							

REVIEW DATE 04/30/2024 BY KBA Total Acres: 0.00 Total Land Value: 187,480 Market: 0 Agricultural: 0 Common: 187,480 PRINTED 08/06/2024 BY SYS