PT OF TRACT A
IN OR 2011/178
SOUTH BEACH SUB PB 3/11

CHARLAND CHADD C &/DOSH KRISTI A
3046 1ST AVE B
FERNANDINA BEACH, FL 32034

2024

00-00-31-1720-000A-0180

BUILDING CHARACTERISTICS

ELEMENT	CD	CONSTRUCTION
Exterior Wall	16	WD FR STUC 60
Exterior Wall	17	CB STUCCO 40
Roof Structur	03	GABLE/HIP 100
Roof Cover	12	MODULAR MT 100
Interior Wall	05	DRYWALL 100
Interior Floo	14	CARPET 80
Interior Floo	11	CLAY TILE 20
Air Condition	03	CENTRAL 100
Heating Type	04	AIR DUCTED 100
Bedrooms		3 100
Bathrooms		3.5 100
Frame	03	MASONRY 100
Stories	3.	3. 100
Units		0 100
Quality	06	Quality Level 06
DOR CODE	0100	SINGLE FAMILY
MAP NUM		MKT AREA 01
NEIGHBORHOOD/LOC	1043.00	

AREA TYPE	TOTAL GROSS AREA	PCT OF BASE	TOT ADJ AREA	SUBAREA MARKET VALUE
BAS	636	100	636	82,189
FGR	424	55	233	30,110
FST	40	55	22	2,843
FUS	608	100	608	78,571
FUS	1,080	100	1,080	139,566
PTO	96	5	5	646
UOP	96	20	19	2,455
UOP	113	20	23	2,973
TOTALS	3,093		2,626	339,353

MARKET ADJUSTMENTS

TYPE	MDL	EFF. AREA	TOT ADJ PTS	EFF. BASE RATE	REPL. COST NEW	AYB	EYB	ECON	FNCT		NORM	% COND
0320	11	2,626	154.5811	146.85	385,628	1999	1999	0	0	0	12.00	88.00

1 TOWNHOUSE - 100% - 2013 Heated Area: 2324 HX Base Yr 2013

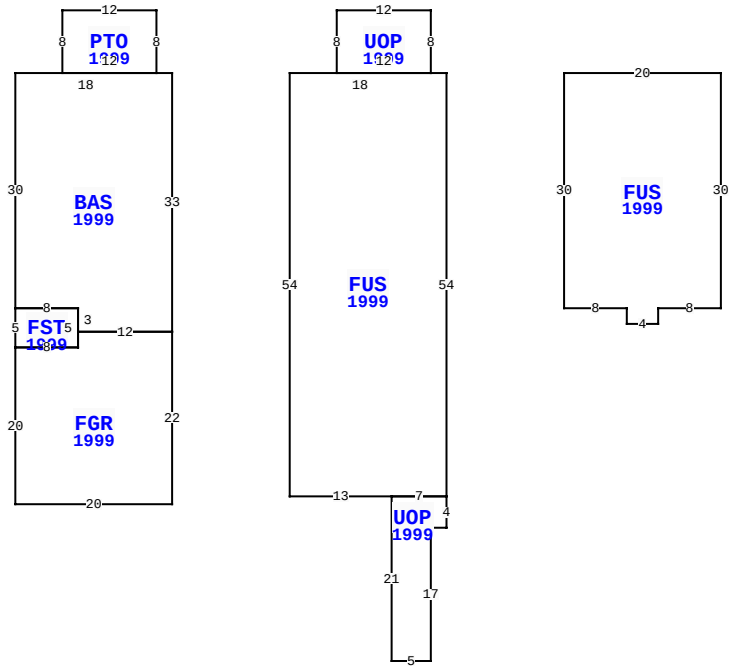

3046 1ST AVE B, FERNANDINA BEACH

BLD DATE		LGL DATE	
XF DATE		LAND DATE	03/13/2024 MLU
INC DATE		AG DATE	

NASSAU COUNTY PROPERTY

PAGE 1 of 1 2

VALUATION SUMMARY

VALUATION BY		STANDARD
Tax Group: 2	Tax Dist:	
BUILDING MARKET VALUE		339,353
TOTAL MARKET OB/XF VALUE		5,818
TOTAL LAND VALUE - MARKET		135,000
TOTAL MARKET VALUE		480,171
SOH/AGL Deduction		267,694
ASSESSED VALUE		212,477
TOTAL EXEMPTION VALUE	HX HB	50,000
BASE TAXABLE VALUE		162,477
TOTAL JUST VALUE		480,171
NCON VALUE		0
INCOME VALUE		
PREVIOUS YEAR MKT VALUE		467,210

PERMIT NUM	DESCRIPTION	AMT	ISSUED
B983880	NEW CONSTR	93,696	06/12/1998

SALES DATA

OFF RECORD Number	DATE	TYPE INST	Q U	V I	RSN CD	SALE PRICE
2011/0178	10/15/2015	QC	U	I	11	100
GRANTOR: CHARLAND CHADD C & KR						
GRANTEE: CHARLAND CHADD C &						
1825/0100	11/14/2012	WD	Q	I	02	265,000
GRANTOR: BRUTSCHER MARTIN & ER						
GRANTEE: CHARLAND CHAD C						

BUILDING NOTES

BUILDING DIMENSIONS

FUS=[YR=1999] W2 UOP=[YR=1999] N8 W12 S8 E12 $ W18 S54 E13
UOP=[YR=1999] S21 E5 N17 E2 N4 W7 $ E7 N54 $ PTR= E15
FUS=[YR=1999] E20 S30 W8 S2 W4 N2 W8 N30 $ W15 $ PTR= W35
BAS=[YR=1999] W2 PTO=[YR=1999] N8 W12 S8 E12 $ W18 S30
FST=[YR=1999] S5 FGR=[YR=1999] S20 E20 N22 W12 S2 W8 $ E8
N5 W8 $ E8 S3 E12 N33 $ E35 $.

EXTRA FEATURES

LN	OB/XF CODE	DESCRIPTION	BLD	CAP	L	W	UNITS	UT	Adj R	ADJ UNIT PRICE	ORIG COND	YEAR ON	YEAR ACTUAL	Q	% COND	OB/XF MKT VALUE	NOTES
1	0810	CONCRETE A	0	100	0	0	582.00	SF	6.50	6.50	100	1999	1999	3	77	2,913	
2	0500	FP-PRE FAB	0	100	0	0	1.00	UT	3,500.00	3,500.00	100	1999	1999	3	83	2,905	

LAND DESCRIPTION

TOTAL OB/XF 5,818

LN	USE CODE	CLS	LAND USE DESCRIPTION	CAP	RD	LOC ZONE	FRONT	DEPTH	TOT LND UTS	UNIT TYPE	DT	DPTH FACT	% COND	TOT ADJ	UNIT PRICE	ADJ UNIT PRICE	LAND VALUE	OTHER ADJUSTMENTS AND NOTES	YEAR	DENSITY	DECL	FRZ	YR	CONSRV
1	000100	C	SFR	100		R-3	20.00	120.00	20.00	FF		1.00	1.00	1.50	4,500.00	6,750.00	135,000							

REVIEW DATE 05/12/2019 BY KBA Total Acres: 0.00 Total Land Value: 135,000 Market: 0 Agricultural: 0 Common: 135,000 PRINTED 08/06/2024 BY SYS