BLOCK 5 SOUTH 30.5' OF LOT 3
IN OR 1923/1735
SOUTH BEACH SUB PB 3/11

FERRIER CRYSTAL R
125 SIMONTON WAY
ST SIMONS ISLAND, GA 31522

2024

00-00-31-1720-0005-0031

BUILDING CHARACTERISTICS

ELEMENT	CD	CONSTRUCTION
Exterior Wall	10	ABOVE AVG 50
Exterior Wall	23	REINF CONC 50
Roof Structur	03	GABLE/HIP 100
Roof Cover	12	MODULAR MT 100
Interior Wall	05	DRYWALL 100
Interior Floo	11	CLAY TILE 60
Interior Floo	14	CARPET 40
Air Condition	03	CENTRAL 100
Heating Type	04	AIR DUCTED 100
Bedrooms		3 100
Bathrooms		3.5 100
Frame	02	WOOD FRAME 100
Stories	2.	2. 100
Units		0 100
Occupancy	00	NONE 100
Quality	05	Quality Level 05
DOR CODE	0100	SINGLE FAMILY
MAP NUM		MKT AREA 01
NEIGHBORHOOD/LOC	1059.00	

AREA TYPE	TOTAL GROSS AREA	PCT OF BASE	TOT ADJ AREA	SUBAREA MARKET VALUE
BAS	806	100	806	91,061
FGR	273	55	150	16,947
FOP	21	30	6	678
FOP	49	30	15	1,695
FUS	1,047	100	1,047	118,289
UOP	62	20	12	1,356
UOP	73	20	15	1,695
TOTALS	2,331		2,051	231,719

MARKET ADJUSTMENTS

TYPE	MDL	EFF. AREA	TOT ADJ PTS	EFF. BASE RATE	REPL. COST NEW	AYB	EYB	ECON	FNCT		NORM	% COND
0320	01	2,051	133.9954	127.30	261,092	2000	2000	0	0	0	11.25	88.75

1 TOWNHOUSE – 0% - 0 Heated Area: 1853 HX Base Yr

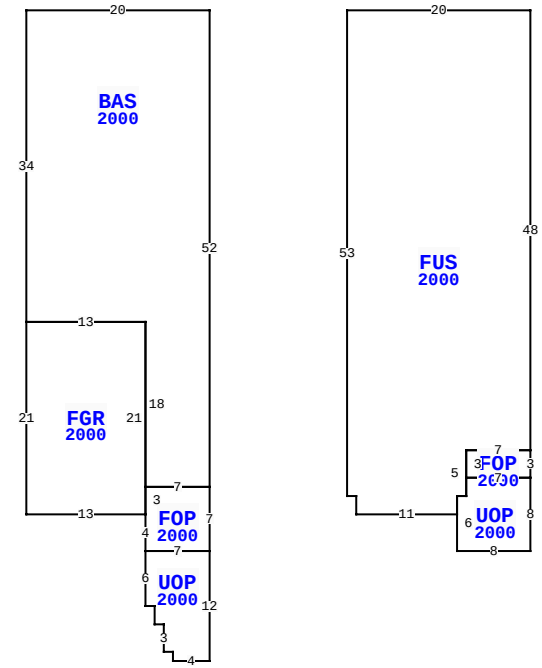

BLD DATE	11/04/2008 DJ	LGL DATE	
XF DATE		LAND DATE	03/20/2024 MLU
INC DATE		AG DATE	

3047 S FLETCHER AVE, FERNANDINA BEACH

NASSAU COUNTY PROPERTY

PAGE 1 of 1 2

VALUATION SUMMARY

VALUATION BY	STANDARD
Tax Group: 2	Tax Dist:
BUILDING MARKET VALUE	231,719
TOTAL MARKET OB/XF VALUE	8,944
TOTAL LAND VALUE - MARKET	204,600
TOTAL MARKET VALUE	445,263
SOH/AGL Deduction	0
ASSESSED VALUE	445,263
TOTAL EXEMPTION VALUE	0
BASE TAXABLE VALUE	445,263
TOTAL JUST VALUE	445,263
NCON VALUE	0
INCOME VALUE	
PREVIOUS YEAR MKT VALUE	433,477

PERMIT NUM	DESCRIPTION	AMT	ISSUED
20080829	ADDITION	4,000	05/15/2008

SALES DATA

OFF RECORD Number	DATE	TYPE INST	Q U	V I	RSN CD	SALE PRICE
1923/1735	6/20/2014	WD	Q	I	01	360,000
GRANTOR: ENGLISH DOUGLAS L & S						
GRANTEE: FERRIER CRYSTAL R						
0996/1247	7/09/2001	WD	Q	I		281,300
GRANTOR: SANDCASTLE INNOVATION						
GRANTEE: ENGLISH DOUGLAS L &						

BUILDING NOTES

BUILDING DIMENSIONS

BAS=[YR=2000] W20 S34 FGR=[YR=2000] S21 E13 FOP=[YR=2000] S4 UOP=[YR=2000] S6 E1 S2 E1 S3 E1 S1 E4 N12 W7 $ E7 N7 W7 S3 $ N21 W13 $ E13 S18 E7 N52 $ PTR= E15 FUS=[YR=2000] E20 S48 FOP=[YR=2000] S3 UOP=[YR=2000] S8 W8 N6 E1 N2 E7 $ W7 N3 E7 $ W7 S5 W1 S2 W11 N2 W1 N53 $ W15 $.

EXTRA FEATURES

LN	OB/XF CODE	DESCRIPTION	BLD	CAP	L	W	UNITS	UT	Adj R	ADJ UNIT PRICE	ORIG COND	YEAR ON	YEAR ACTUAL	Q	% COND	OB/XF MKT VALUE	NOTES
1	0811	CONCRETE B	0	0	0	0	801.00	SF	5.20	5.20	100	2000	2000	3	79	3,291	
2	0446	BOX FNC 6'	0	0	0	0	91.00	LF	20.00	20.00	100	2000	2000	3	20	364	
3	0810	CONCRETE A	0	0	0	0	491.00	SF	6.50	6.50	100	2000	2000	3	79	2,521	
4	1126	CB/STC 8"	0	0	0	0	438.00	SF	8.00	8.00	100	2000	2000	3	79	2,768	

LAND DESCRIPTION

TOTAL OB/XF 8,944

LN	USE CODE	CLS	LAND USE DESCRIPTION	CAP	RD	LOC ZONE	FRONT	DEPTH	TOT LND UTS	UNIT TYPE	DT	DPTH FACT	% COND	TOT ADJ	UNIT PRICE	ADJ UNIT PRICE	LAND VALUE	OTHER ADJUSTMENTS AND NOTES	YEAR	DENSITY	DECL	FRZ	YR	CONSRV
1	000100	C	SFR	0		R-3	30.00	100.00	30.00	FF	1	1.00	1.00	1.10	6,200.00	6,820.00	204,600							

REVIEW DATE 03/25/2020 BY DJA Total Acres: 0.00 Total Land Value: 204,600 Market: 0 Agricultural: 0 Common: 204,600 PRINTED 08/06/2024 BY SYS