BLOCK 7 LOTS 5 THRU 8 &
LOTS 1 THRU 4 &
E35 FT OF LOTS 25 THRU 32

OAKWOOD PROPERTIES INC
PO BOX 4200
TUPELO, MS 38803

2024

00-00-31-1680-0007-0050

NASSAU COUNTY PROPERTY

BUILDING CHARACTERISTICS

ELEMENT	CD	CONSTRUCTION
Exterior Wall	10	ABOVE AVG 100
Roof Structur	08	IRREGULAR 100
Roof Cover	11	SLATE 100
Interior Wall	06	CUST PANEL 60
Interior Wall	05	DRYWALL 40
Interior Floo	15	HARDTILE 60
Interior Floo	12	HARDWOOD 40
Air Condition	03	CENTRAL 100
Heating Type	04	AIR DUCTED 100
Bedrooms		5 100
Bathrooms		6.5 100
Frame	03	MASONRY 100
Stories	3.	3. 100
Units		0 100
Quality	03	Quality Level 03
DOR CODE	0100	SINGLE FAMILY
MAP NUM		MKT AREA 01
NEIGHBORHOOD/LOC	1053.00	

AREA TYPE	TOTAL GROSS AREA	PCT OF BASE	TOT ADJ AREA	SUBAREA MARKET VALUE
BAL	128	15	19	11,782
BAS	2,315	100	2,315	1,435,533
FOP	96	30	29	17,983
FOP	108	30	32	19,843
FOP	1,215	30	364	225,716
FST	70	55	38	23,564
FST	70	55	38	23,564
FST	320	55	176	109,137
FUS	819	100	819	507,862
FUS	1,977	100	1,977	1,225,939
TOTALS	7,243		5,819	3,608,365

MARKET ADJUSTMENTS

TYPE	MDL	EFF. AREA	TOT ADJ PTS	EFF. BASE RATE	REPL. COST NEW	AYB	EYB	ECON	FNCT		NORM	% COND
0500	22	5,819	432.8778	649.32	3,778,393	2013	2013	0	0	0	4.50	95.50

1 SFR CUST – 0% - 0 Heated Area: 5111 HX Base Yr

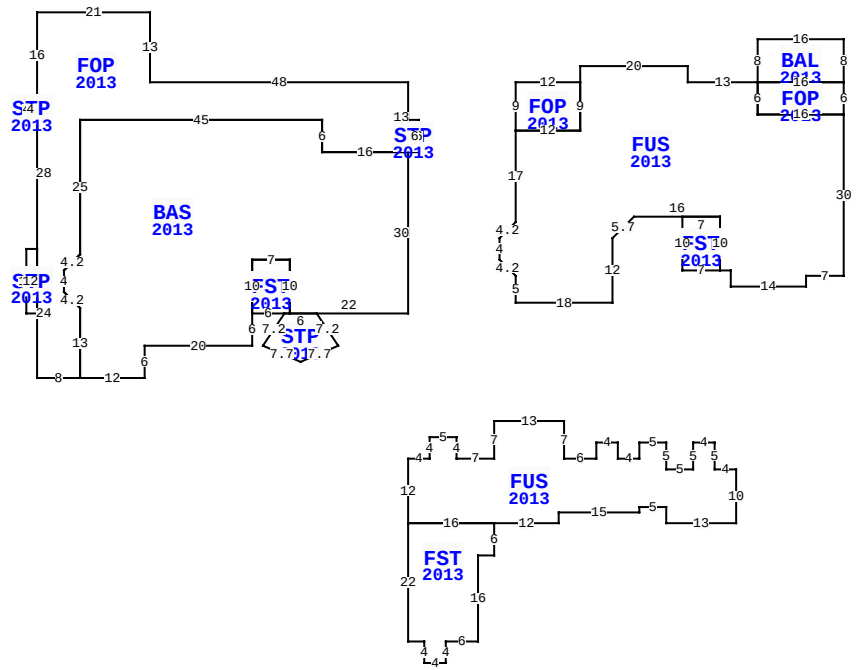

** This building has 14 Sub-Areas

3860 S FLETCHER AV, FERNANDINA BEACH

BLD DATE		LGL DATE	
XF DATE		LAND DATE	05/07/2024 MLU
INC DATE		AG DATE	

VALUATION SUMMARY

VALUATION BY	STANDARD
Tax Group: 2	Tax Dist:
BUILDING MARKET VALUE	4,146,857
TOTAL MARKET OB/XF VALUE	181,087
TOTAL LAND VALUE - MARKET	3,894,000
TOTAL MARKET VALUE	8,221,944
SOH/AGL Deduction	1,563,954
ASSESSED VALUE	6,657,990
TOTAL EXEMPTION VALUE	0
BASE TAXABLE VALUE	6,657,990
TOTAL JUST VALUE	8,221,944
NCON VALUE	0
INCOME VALUE	
PREVIOUS YEAR MKT VALUE	7,452,350

PERMIT NUM	DESCRIPTION	AMT	ISSUED
20121339	SLATE ROOF	26,790	07/09/2012
20120683	H/AC	50,000	04/19/2012
20111883	NEW CONSTR	7,500	10/19/2011
20111884	NEW CONSTR	2,500	10/19/2011
20111771	NEW CONSTR	5,500	10/04/2011
20111718	NEW CONSTR	1,225,000	09/28/2011

SALES DATA

OFF RECORD Number	DATE	TYPE INST	Q / U	V / I	RSN CD	SALE PRICE
1683/1550	6/18/2010	WD	U	V	37	1,260,000
GRANTOR: WIGGINS ROBERT L SR						
GRANTEE: OAKWOOD PROPERTIES						
1126/1504	4/02/2003	WD	Q	V		1,025,000
GRANTOR: EVERITT JANE						
GRANTEE: WIGGINS ROBERT L SR						

BUILDING NOTES

EXTRA FEATURES

LN	OB/XF CODE	DESCRIPTION	BLD	CAP	L	W	UNITS	UT	Adj R	ADJ UNIT PRICE	ORIG COND	YEAR ON	YEAR ACTUAL	Q	% COND	OB/XF MKT VALUE	NOTES
1	0504	FP-ELECTRI	0	0	0	0	1.00	UT	2,000.00	2,000.00	100	2013	2013	3	96	1,920	
2	0504	FP-ELECTRI	0	0	0	0	1.00	UT	2,000.00	2,000.00	100	2013	2013	3	96	1,920	
3	0835	QUARY TILE	0	0	0	0	392.00	SF	10.00	10.00	100	2013	2013	3	94	3,685	
4	1075	TRELLIS G	0	0	27	12	324.00	SF	35.00	35.00	100	2013	2013	3	71	8,051	
5	0861	POOL GUNIT	0	0	0	0	703.00	SF	127.50	127.50	100	2013	2013	3	71	63,639	
6	0835	QUARY TILE	0	0	0	0	1,172.00	SF	10.00	10.00	100	2013	2013	3	94	11,017	
7	0991	TENNIS CRT	0	0	60	12	1.00	UT	7,200.00	7,200.00	100	2013	2013	3	92	6,624	
8	1126	CB/STC 8"	0	0	217	2	434.00	SF	8.00	8.00	100	2013	2013	3	94	3,264	
9	0462	ST/AL FNC	0	0	0	0	1,552.00	SF	10.00	10.00	100	2013	2013	3	71	11,019	
10	0410	ELEVATOR	0	0	0	0	1.00	UT	10,000.00	10,000.00	100	2013	2013	3	100	10,000	

BUILDING DIMENSIONS

FOP=[YR=2013] W48 N13 W21 S16 STP=[YR=2013] W2S4E2N4$S28
STP=[YR=2013] W2S12E2N12$ S24E8 BAS=[YR=2013] E12 N6E20N6
FST=[YR=2013] E6 STP=[YR=2013] D6 L4 D3 R7 U3 R7 U6 L4
W6$ E1 N10 W7 S10$ N10E7S10E22N30 W16 N6 W45 S25 D3 L3 S4
D3 R3 S13$ N13 U3 L3 N4 U3 R3 N25 E45 S6 E16
STP=[YR=2013] E2N6W2S6$ N13$ PTR=E20 FOP=[YR=2013] E12
FUS=[YR=2013] N3 E20 S3 E13 BAL=[YR=2013]
N8E16S8W16$FOP=[YR=2013] E16S6W16N6$ S6E16 S30 W7 S2 W14 N3
W2 FST=[YR=2013] W7N10E7S10$N10W16 D4 L4 S12W18N5 U3 L3 N4 U3
R3 N17E12 N9$ S9W12N9$ W20$ PTR=S70 FUS=[YR=2013]
E4N4E5S4E7N7E13S7E6N3 E4S3E4N3E5S5E5N5E4S5E4S10W13N3
W5S1W15S2W12 FST=[YR=2013] S6W3S16W6 S4W4N4W3N22E16$ W16N12$

LAND DESCRIPTION

TOTAL OB/XF 121,139

LN	USE CODE	CLS	LAND USE DESCRIPTION	CAP	RD	LOC ZONE	FRONT	DEPTH	TOT LND UTS	UNIT TYPE	DT	DPTH FACT	% COND	TOT ADJ	UNIT PRICE	ADJ UNIT PRICE	LAND VALUE	OTHER ADJUSTMENTS AND NOTES	YEAR	DENSITY	DECL	FRZ	YR	CONSRV
1	000120	C	SFR OCN FT	0		R-1	100.00	400.00	100.00	FF	3	1.18	1.00	1.18	16,500.00	19,470.00	1,947,000							
2	000120	C	SFR OCN FT	0		R-1	100.00	400.00	100.00	FF	3	1.18	1.00	1.18	16,500.00	19,470.00	1,947,000							

REVIEW DATE 05/12/2019 BY KBA Total Acres: 0.00 Total Land Value: 3,894,000 Market: 0 Agricultural: 0 Common: 3,894,000 PRINTED 08/06/2024 BY SYS

BLOCK 7 LOTS 5 THRU 8 &
LOTS 1 THRU 4 &
E35 FT OF LOTS 25 THRU 32

OAKWOOD PROPERTIES INC
PO BOX 4200
TUPELO, MS 38803

2024

00-00-31-1680-0007-0050

NASSAU COUNTY PROPERTY

BUILDING CHARACTERISTICS

ELEMENT	CD	CONSTRUCTION
Exterior Wall	10	ABOVE AVG 100
Roof Structur	08	IRREGULAR 100
Roof Cover	11	SLATE 100
Interior Wall	06	CUST PANEL 100
Interior Floo	12	HARDWOOD 100
Air Condition	03	CENTRAL 100
Heating Type	04	AIR DUCTED 100
Bedrooms		0 100
Bathrooms		1 100
Frame	03	MASONRY 100
Stories	2.	2. 100
Units		0 100
Quality	03	Quality Level 03
DOR CODE	0100	SINGLE FAMILY
MAP NUM		MKT AREA 01
NEIGHBORHOOD/LOC	1053.00	

AREA TYPE	TOTAL GROSS AREA	PCT OF BASE	TOT ADJ AREA	SUBAREA MARKET VALUE
BAS	44	100	44	14,536
FGR	702	55	386	127,520
FOP	30	30	9	2,973
FOP	99	30	30	9,911
FOP	209	30	63	20,813
FST	50	55	28	9,250
FST	56	55	31	10,241
FST	64	55	35	11,563
FUS	812	100	812	268,255
SFB	231	80	185	61,117
TOTALS	2,369		1,630	538,492

MARKET ADJUSTMENTS

TYPE	MDL	EFF. AREA	TOT ADJ PTS	EFF. BASE RATE	REPL. COST NEW	AYB	EYB	ECON	FNCT		NORM	% COND
0500	12	1,630	230.6220	345.93	563,866	2013	2013	0	0	0	4.50	95.50

2 SFR CUST – 0% - 0 Heated Area: 1041 HX Base Yr

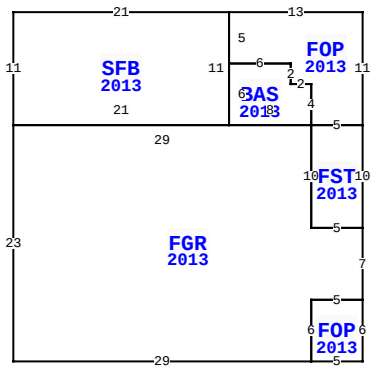

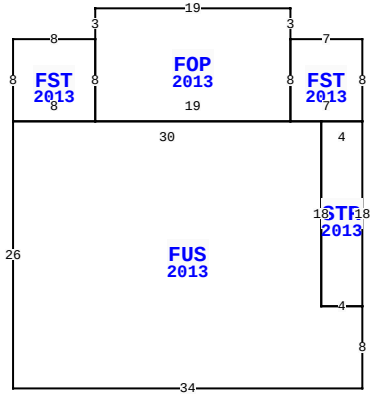

** This building has 11 Sub-Areas

3860 S FLETCHER AV, FERNANDINA BEACH

BLD DATE		LGL DATE	
XF DATE		LAND DATE	05/07/2024 MLU
INC DATE		AG DATE	

NASSAU COUNTY PROPERTY — VALUATION SUMMARY

VALUATION BY	STANDARD
Tax Group: 2	Tax Dist:
BUILDING MARKET VALUE	4,146,857
TOTAL MARKET OB/XF VALUE	181,087
TOTAL LAND VALUE - MARKET	3,894,000
TOTAL MARKET VALUE	8,221,944
SOH/AGL Deduction	1,563,954
ASSESSED VALUE	6,657,990
TOTAL EXEMPTION VALUE	0
BASE TAXABLE VALUE	6,657,990
TOTAL JUST VALUE	8,221,944
NCON VALUE	0
INCOME VALUE	
PREVIOUS YEAR MKT VALUE	7,452,350

PERMIT NUM	DESCRIPTION	AMT	ISSUED

SALES DATA

OFF RECORD Number	DATE	TYPE INST	Q / U	V / I	RSN CD	SALE PRICE
1683/1550	6/18/2010	WD	U	V	37	1,260,000
GRANTOR: WIGGINS ROBERT L SR						
GRANTEE: OAKWOOD PROPERTIES						
1126/1504	4/02/2003	WD	Q	V		1,025,000
GRANTOR: EVERITT JANE						
GRANTEE: WIGGINS ROBERT L SR						

BUILDING NOTES

BUILDING DIMENSIONS

FOP=[YR=2013] W13 SFB=[YR=2013] W21 S11 FGR=[YR=2013] S23 E29 FOP=[YR=2013] E5 N6 W5 S6$ N6 E5 N7 FST=[YR=2013] N10 W5 S10 E5$ W5 N10 BAS=[YR=2013] W8 N6 E6 S2 E2 S4$ W29$ E21 N11$ S5 E6 S2 E2 S4 E5 N11$ PTR= E20 FST=[YR=2013] E8 FOP=[YR=2013] N3 E19 S3 FST=[YR=2013] E7 S8 STR=[YR=2013] S18 FUS=[YR=2013] S8 W34 N26 E30 S18 E4$ W4 N18 E4$ W7 N8$ S8 W19 N8$ S8 W8 N8$ W20$.

EXTRA FEATURES

LN	OB/XF CODE	DESCRIPTION	BLD	CAP	L	W	UNITS	UT	Adj R	ADJ UNIT PRICE	ORIG COND	YEAR ON	YEAR ACTUAL	Q	% COND	OB/XF MKT VALUE	NOTES
11	0416	DUNEWALKS	0	0	402	4	1,608.00	SF	15.00	15.00	100	2013	2013	3	60	14,472	
12	0462	ST/AL FNC	0	0	0	0	600.00	SF	10.00	10.00	100	2013	2013	3	71	4,260	
13	1076	TRELLIS A	0	0	28	3	84.00	SF	7.50	7.50	100	2013	2013	3	71	447	
14	0463	FENCE GATE	0	0	0	0	2.00	UT	5,400.00	5,400.00	100	2013	2013	3	85	9,180	
15	0092	AUTO GATE	0	0	0	0	2.00	UT	3,500.00	3,500.00	100	2013	2013	3	60	4,200	
16	1126	CB/STC 8"	0	0	0	0	197.00	SF	8.00	8.00	100	2013	2013	3	94	1,481	
17	0835	QUARY TILE	0	0	0	0	321.00	SF	10.00	10.00	100	2013	2013	3	94	3,017	
18	0450	PREFAB FNC	0	0	48	6	288.00	LF	8.00	8.00	100	2013	2013	3	60	1,382	
19	0825	BRICK	0	0	0	0	1,675.00	SF	12.50	12.50	100	2013	2013	3	98	20,519	
20	0810	CONCRETE A	0	0	0	0	162.00	SF	6.50	6.50	100	2013	2013	3	94	990	

TOTAL OB/XF 59,948

LAND DESCRIPTION

LN	USE CODE	CLS	LAND USE DESCRIPTION	CAP	RD	LOC ZONE	FRONT	DEPTH	TOT LND UTS	UNIT TYPE	DT	DPTH FACT	% COND	TOT ADJ	UNIT PRICE	ADJ UNIT PRICE	LAND VALUE	OTHER ADJUSTMENTS AND NOTES	YEAR	DENSITY	DECL	FRZ	YR	CONSRV

REVIEW DATE 05/12/2019 BY KBA Total Acres: 0.00 Total Land Value: 3,894,000 Market: 0 Agricultural: 0 Common: 3,894,000 PRINTED 08/06/2024 BY SYS