BLOCK 3 LOTS 1-3 & E35 FT OF
LOTS 30-32
SEAVIEW SUB PB 1/7

KIENLE FAMILY REVOCABLE TRUST/KIENLE PHILIP R TRUS
3500 S FLETCHER AVE
FERNANDINA BEACH, FL 32034

2024

00-00-31-1680-0003-0010

NASSAU COUNTY PROPERTY

BUILDING CHARACTERISTICS

ELEMENT	CD	CONSTRUCTION
Exterior Wall	16	WD FR STUC 100
Roof Structur	03	GABLE/HIP 100
Roof Cover	03	COMP SHNGL 100
Interior Wall	05	DRYWALL 100
Interior Floo	14	CARPET 80
Interior Floo	11	CLAY TILE 20
Air Condition	03	CENTRAL 100
Heating Type	04	AIR DUCTED 100
Bedrooms		3 100
Bathrooms		2.5 100
Frame	02	WOOD FRAME 100
Stories	2.	2. 100
Units		0 100
Quality	04	Quality Level 04

DOR CODE 0100 SINGLE FAMILY
MAP NUM | MKT AREA 01
NEIGHBORHOOD/LOC 1053.00

AREA TYPE	TOTAL GROSS AREA	PCT OF BASE	TOT ADJ AREA	SUBAREA MARKET VALUE
BAS	1,235	100	1,235	210,751
FGR	815	55	448	76,451
FOP	88	30	26	4,437
FST	0	55	0	0
FUS	2,050	100	2,050	349,830
PTO	210	5	10	1,706
PTO	210	5	10	1,706
UOP	769	20	154	26,280
TOTALS	5,377		3,933	671,161

MARKET ADJUSTMENTS

TYPE	MDL	EFF. AREA	TOT ADJ PTS	EFF. BASE RATE	REPL. COST NEW	AYB	EYB	ECON	FNCT		NORM	% COND
0500	11	3,933	127.8288	191.74	754,113	1991	2001	0	0	0	11.00	89.00

1 SFR CUST – 100% - 2020 Heated Area: 3285 HX Base Yr 2020

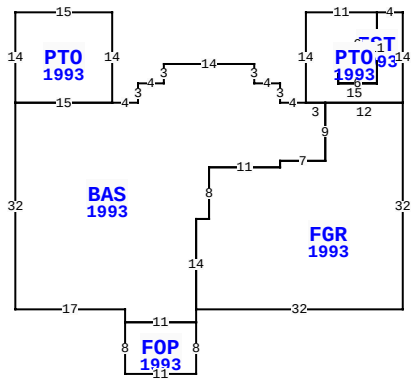

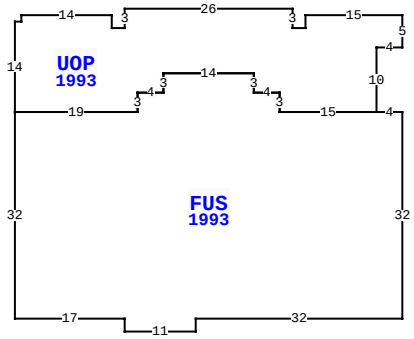

3500 S FLETCHER AVE, FERNANDINA BEACH

BLD DATE		LGL DATE	
XF DATE		LAND DATE	05/07/2024 MLU
INC DATE		AG DATE	

VALUATION SUMMARY

VALUATION BY		STANDARD
Tax Group: 2	Tax Dist:	
BUILDING MARKET VALUE		671,161
TOTAL MARKET OB/XF VALUE		41,818
TOTAL LAND VALUE - MARKET		1,460,250
TOTAL MARKET VALUE		2,173,229
SOH/AGL Deduction		533,279
ASSESSED VALUE		1,639,950
TOTAL EXEMPTION VALUE	HX HB	50,000
BASE TAXABLE VALUE		1,589,950
TOTAL JUST VALUE		2,173,229
NCON VALUE		0
INCOME VALUE		
PREVIOUS YEAR MKT VALUE		1,922,595

PERMIT NUM	DESCRIPTION	AMT	ISSUED
2024-0353	POOL	153,000	07/23/2024
2024-0164		657,400	05/10/2024
2024-0004	REMOVE COQ STUCCO	5,000	03/15/2024
2024-0002	DEMO POOL	4,000	02/02/2024
6393	SWIM POOL	21,000	03/01/1991
6374	NEW CONSTR	356,000	02/15/1991

SALES DATA

OFF RECORD Number	DATE	TYPE INST	Q / U	V / I	RSN CD	SALE PRICE
2256/0783	2/20/2019	TD	Q	I	01	2,250,000
GRANTOR: ROBERT L WALKER REV T						
GRANTEE: KIENLE FAMILY REVOC						
1075/1177	8/19/2002	WD	U	I	01	100
GRANTOR: WALTER ROBERT L & HEL						
GRANTEE: WALTER HELEN F & RO						

BUILDING NOTES

BUILDING DIMENSIONS

FST=[YR=1993] W6 S6 E6 N11 PTO=[YR=1993] W11 S14
BAS=[YR=1993] W4 N3 W4 N3 W14 S3 W4 S3 W4 PTO=[YR=1993] N14
W15 S14 E15 $ W15 S32 E17 S2 FOP=[YR=1993] S8 E11 N8 W11 $
E11 N2 FGR=[YR=1993] E32 N32 W12 S9 W7 S1 W11 S8 W2 S14 $ N14
E2N8E11 N1 E7 N9 W3$ E15 N14 W4$ S11 W6 N6 E6$ PTR= E24
UOP=[YR=1993] E1 N1 E14 S2 E2 N3 E26 S3 E2 N2 E15 S5 W4
S10FUS=[YR=1993] E4S32 W32 S2 W11 N2 W17 N32E19N3E4N3E14S3E4
S3E15$ W15 N3 W4 N3 W14S3W4S3 W19N14 $ W24 $.

EXTRA FEATURES

LN	OB/XF CODE	DESCRIPTION	BLD	CAP	L	W	UNITS	UT	Adj R	ADJ UNIT PRICE	ORIG COND	YEAR ON	YEAR ACTUAL	Q	% COND	OB/XF MKT VALUE	NOTES
1	0500	FP-PRE FAB	0	100	0	0	1.00	UT	3,535.00	3,535.00	100	1991	1991	3	70	2,475	
2	0812	CONCRETE C	0	100	0	0	3,297.00	SF	4.00	4.00	100	1991	1991	3	62	8,177	
3	0855	CONC PAVER	0	100	0	0	1,174.00	SF	20.00	20.00	0.02	2019	2019	3	97.98	23,006	
4	0861	POOL GUNIT	0	100	30	8	240.00	SF	170.00	170.00	100	1991	1991	3	20	8,160	

LAND DESCRIPTION

TOTAL OB/XF 41,818

LN	USE CODE	CLS	LAND USE DESCRIPTION	CAP	RD	LOC ZONE	FRONT	DEPTH	TOT LND UTS	UNIT TYPE	DT	DPTH FACT	% COND	TOT ADJ	UNIT PRICE	ADJ UNIT PRICE	LAND VALUE	OTHER ADJUSTMENTS AND NOTES	YEAR	DENSITY	DECL	FRZ	YR	CONSRV
1	000120	C	SFR OCN FT	100		R-1	75.00	400.00	75.00	FF	3	1.18	1.00	1.18	16,500.00	19,470.00	1,460,250							

REVIEW DATE 02/10/2020 BY DJ Total Acres: 0.00 Total Land Value: 1,460,250 Market: 0 Agricultural: 0 Common: 1,460,250 PRINTED 08/06/2024 BY SYS