W 44.53 FT LOT 20 & E 41 FT
LOT 21 PT OR IN OR 2336/1963
SCHOONER LANDING PBK 6/246

PATTEN BRIAN J & LEIGH ANN
2504 SAFE HARBOR LN
FERNANDINA BEACH, FL 32034

**2024**

**00-00-31-167C-0020-0000**

## BUILDING CHARACTERISTICS

| ELEMENT | CD | CONSTRUCTION |
|---|---|---|
| Exterior Wall | 10 | ABOVE AVG 100 |
| Roof Structur | 08 | IRREGULAR 100 |
| Roof Cover | 03 | COMP SHNGL 100 |
| Interior Wall | 05 | DRYWALL 100 |
| Interior Floo | 11 | CLAY TILE 60 |
| Interior Floo | 14 | CARPET 40 |
| Air Condition | 03 | CENTRAL 100 |
| Heating Type | 04 | AIR DUCTED 100 |
| Bedrooms | | 4 100 |
| Bathrooms | | 3 100 |
| Frame | 02 | WOOD FRAME 100 |
| Stories | 2. | 2. 100 |
| Units | | 0 100 |
| Occupancy | 00 | NONE 100 |
| Quality | 05 | Quality Level 05 |
| DOR CODE | 0100 | SINGLE FAMILY |
| MAP NUM | | MKT AREA 01 |
| NEIGHBORHOOD/LOC | 1047.00 | |

| AREA TYPE | TOTAL GROSS AREA | PCT OF BASE | TOT ADJ AREA | SUBAREA MARKET VALUE |
|---|---|---|---|---|
| BAS | 1,837 | 100 | 1,837 | 321,922 |
| FGR | 575 | 55 | 316 | 55,377 |
| FOP | 246 | 30 | 74 | 12,968 |
| FOP | 375 | 30 | 112 | 19,627 |
| FUS | 965 | 100 | 965 | 169,110 |
| STR | 54 | 10 | 5 | 876 |
| TOTALS | 4,052 | | 3,309 | 579,881 |

## MARKET ADJUSTMENTS

| TYPE | MDL | EFF. AREA | TOT ADJ PTS | EFF. BASE RATE | REPL. COST NEW | AYB | EYB | ECON | FNCT | | NORM | % COND |
|---|---|---|---|---|---|---|---|---|---|---|---|---|
| 0500 | 01 | 3,309 | 119.2136 | 178.82 | 591,715 | 2018 | 2018 | 0 | 0 | 0 | 2.00 | 98.00 |

1 SFR CUST – 100% - 2019 Heated Area: 2802 HX Base Yr 2019

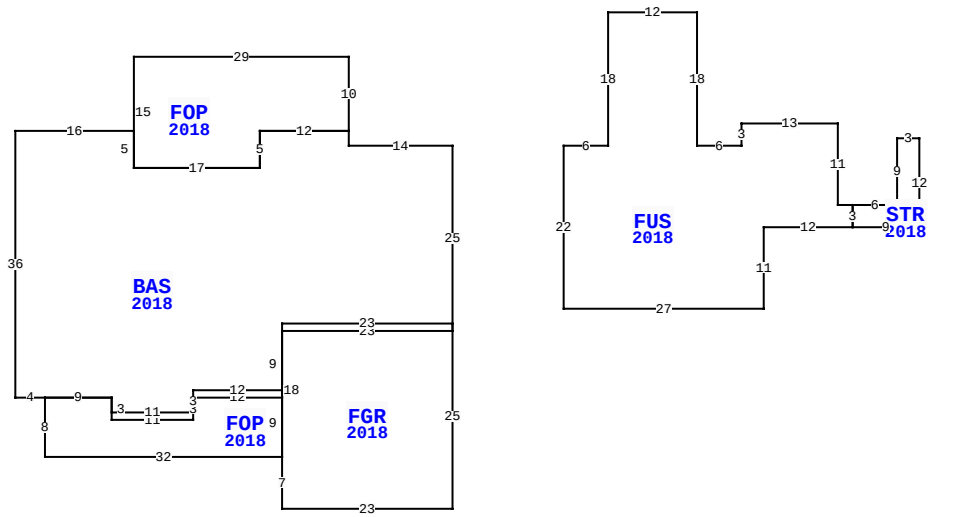


| | | | |
|---|---|---|---|
| BLD DATE | | LGL DATE | |
| XF DATE | | LAND DATE | 03/14/2024 MLU |
| INC DATE | | AG DATE | |

2504 SAFE HARBOR LN, FERNANDINA BEACH

## NASSAU COUNTY PROPERTY

PAGE 1 of 1 2

### VALUATION SUMMARY

| | | |
|---|---|---|
| VALUATION BY | | STANDARD |
| Tax Group: 2 | Tax Dist: | |
| BUILDING MARKET VALUE | | 579,881 |
| TOTAL MARKET OB/XF VALUE | | 49,094 |
| TOTAL LAND VALUE - MARKET | | 175,000 |
| TOTAL MARKET VALUE | | 803,975 |
| SOH/AGL Deduction | | 333,909 |
| ASSESSED VALUE | | 470,066 |
| TOTAL EXEMPTION VALUE | HX HB | 50,000 |
| BASE TAXABLE VALUE | | 420,066 |
| TOTAL JUST VALUE | | 803,975 |
| NCON VALUE | | 0 |
| INCOME VALUE | | |
| PREVIOUS YEAR MKT VALUE | | 728,603 |

| PERMIT NUM | DESCRIPTION | AMT | ISSUED |
|---|---|---|---|
| 20200118 | SWIM POOL | 50,000 | 03/19/2020 |
| 20180093 | CO ISSUED | 0 | 05/25/2018 |
| 20180093 | NEW CONSTR | 366,167 | 01/10/2018 |

## SALES DATA

| OFF RECORD Number | DATE | TYPE INST | Q / U | V / I | RSN CD | SALE PRICE |
|---|---|---|---|---|---|---|
| 2336/1963 | 1/29/2020 | QC | U | I | 11 | 100 |
| GRANTOR: PATTEN BRIAN J & LEIG | | | | | | |
| GRANTEE: PATTEN BRIAN J & LE | | | | | | |
| 2152/1179 | 10/18/2017 | WD | Q | V | 01 | 120,000 |
| GRANTOR: RICE LINDA J | | | | | | |
| GRANTEE: PATTEN BRIAN J & LE | | | | | | |

## BUILDING NOTES

## BUILDING DIMENSIONS

BAS=[YR=2018] W14 N2 FOP=[YR=2018] N10W29 S15 E17 N5 E12$ W12 S5 W17 N5 W16 S36 E4 FOP=[YR=2018] S8 E32 FGR=[YR=2018] S7 E23 N25 W23 S18$ N9 W12 S3 W11 N2 W9$ E9 S3 E11 N3 E12 N9E23 N25$ PTR=E15 FUS=[YR=2018] E6 N18 E12 S18 E6 N3 E13 S11 E2 STR=[YR=2018] E6 N9 E3 S12 W9 N3$ S3W12 S11 W27 N22$ W15$.

## EXTRA FEATURES

| LN | OB/XF CODE | DESCRIPTION | BLD | CAP | L | W | UNITS | UT | Adj R | ADJ UNIT PRICE | ORIG COND | YEAR ON | YEAR ACTUAL | Q | % COND | OB/XF MKT VALUE | NOTES |
|---|---|---|---|---|---|---|---|---|---|---|---|---|---|---|---|---|---|
| 1 | 0811 | CONCRETE B | 0 | 100 | 0 | 0 | 1,003.00 | SF | 5.20 | 5.20 | 100 | 2018 | 2018 | 3 | 97 | 5,059 | |
| 2 | 0810 | CONCRETE A | 0 | 100 | 0 | 0 | 124.00 | SF | 6.50 | 6.50 | 100 | 2018 | 2018 | 3 | 97 | 782 | |
| 3 | 0476 | VF 6 SBPL | 0 | 100 | 0 | 0 | 64.00 | LF | 32.00 | 32.00 | 100 | 2018 | 2018 | 3 | 94 | 1,925 | |
| 4 | 0470 | VNYL GATE | 0 | 100 | 0 | 0 | 2.00 | UT | 300.00 | 300.00 | 100 | 2018 | 2018 | 3 | 94 | 564 | |
| 5 | 0861 | POOL GUNIT | 0 | 100 | 0 | 0 | 424.00 | SF | 85.00 | 85.00 | 100 | 2020 | 2020 | 3 | 93 | 33,517 | |
| 6 | 0855 | CONC PAVER | 0 | 100 | 0 | 0 | 732.00 | SF | 10.00 | 10.00 | 100 | 2020 | 2020 | 3 | 99 | 7,247 | |

## LAND DESCRIPTION

TOTAL OB/XF 49,094

| LN | USE CODE | CLS | LAND USE DESCRIPTION | CAP | RD | LOC ZONE | FRONT | DEPTH | TOT LND UTS | UNIT TYPE | DT | DPTH FACT | % COND | TOT ADJ | UNIT PRICE | ADJ UNIT PRICE | LAND VALUE | OTHER ADJUSTMENTS AND NOTES | YEAR | DENSITY | DECL | FRZ | YR | CONSRV |
|---|---|---|---|---|---|---|---|---|---|---|---|---|---|---|---|---|---|---|---|---|---|---|---|---|
| 1 | 000100 | C | SFR | 100 | | R-1 | 0.00 | 0.00 | 1.00 | LT | | 1.00 | 1.00 | 1.00 | 175,000.00 | 175,000.00 | 175,000 | | | | | | | |

REVIEW DATE 08/20/2020 BY DJ Total Acres: 0.00 Total Land Value: 175,000 Market: 0 Agricultural: 0 Common: 175,000 PRINTED 08/06/2024 BY SYS