LOT 4
SCHOONER LANDING PB 6/246

MCCOY SHEILA R &/KEISTER DANIEL J JR
2141 SAFE HARBOR LANE
FERNANDINA BEACH, FL 32034

2024

00-00-31-167C-0004-0000

BUILDING CHARACTERISTICS

ELEMENT	CD	CONSTRUCTION
Exterior Wall	16	WD FR STUC 100
Roof Structur	03	GABLE/HIP 100
Roof Cover	03	COMP SHNGL 100
Interior Wall	05	DRYWALL 100
Interior Floo	13	LVT/LAMNT 60
Interior Floo	14	CARPET 40
Air Condition	03	CENTRAL 100
Heating Type	04	AIR DUCTED 100
Bedrooms		3 100
Bathrooms		2.5 100
Frame	02	WOOD FRAME 100
Stories	2.	2. 100
Units		0 100
Occupancy	00	NONE 100
Quality	05	Quality Level 05

DOR CODE 0100 SINGLE FAMILY
MAP NUM | MKT AREA 01
NEIGHBORHOOD/LOC 1047.00

AREA TYPE	TOTAL GROSS AREA	PCT OF BASE	TOT ADJ AREA	SUBAREA MARKET VALUE
BAS	2,140	100	2,140	336,842
FGR	561	55	309	48,638
FOP	68	30	20	3,148
FUS	315	100	315	49,582
STP	10	10	1	157
STP	14	10	1	157
STP	16	10	2	315
TOTALS	3,124		2,788	438,838

MARKET ADJUSTMENTS

TYPE	MDL	EFF. AREA	TOT ADJ PTS	EFF. BASE RATE	REPL. COST NEW	AYB	EYB	ECON	FNCT		NORM	% COND
0500	01	2,788	115.3152	172.97	482,240	2005	2005	0	0	0	9.00	91.00

1 SFR CUST – 100% - 2024 Heated Area: 2455 HX Base Yr 2024

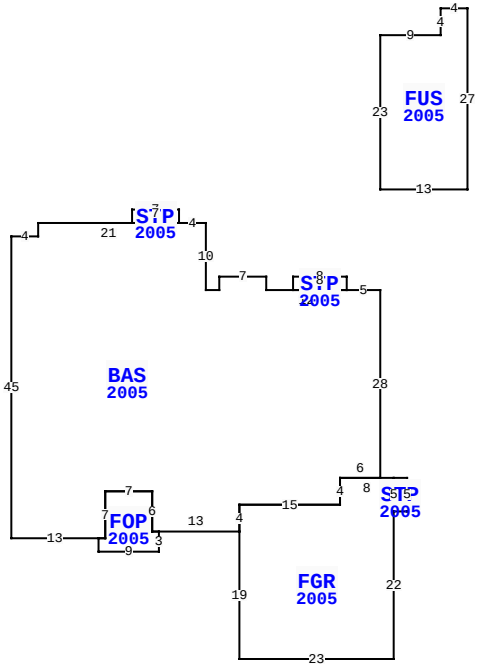

2141 SAFE HARBOR LN, FERNANDINA BEACH

BLD DATE		LGL DATE	
XF DATE		LAND DATE	03/14/2024 MLU
INC DATE		AG DATE	

NASSAU COUNTY PROPERTY

PAGE 1 of 1 2

VALUATION SUMMARY

VALUATION BY		STANDARD
Tax Group: 2	Tax Dist:	
BUILDING MARKET VALUE		438,838
TOTAL MARKET OB/XF VALUE		35,610
TOTAL LAND VALUE - MARKET		192,500
TOTAL MARKET VALUE		666,948
SOH/AGL Deduction		0
ASSESSED VALUE		666,948
TOTAL EXEMPTION VALUE	HX HB	50,000
BASE TAXABLE VALUE		616,948
TOTAL JUST VALUE		666,948
NCON VALUE		0
INCOME VALUE		
PREVIOUS YEAR MKT VALUE		593,934

PERMIT NUM	DESCRIPTION	AMT	ISSUED
2023-0488	SCR RM	32,760	02/23/2024
20071530	REMODEL	1,000	08/16/2007
20070991	SWIM POOL	23,000	06/05/2007
20070990	FOUNDATION	1,000	06/04/2007
20042064	OTHER	7,000	11/03/2004
20041816	NEW CONSTR	12,000	10/07/2004

SALES DATA

OFF RECORD Number	DATE	TYPE INST	Q U	V I	RSN CD	SALE PRICE
2629/1082	4/04/2023	WD	Q	I	01	829,000
GRANTOR: HILD DAVID W & JANET						
GRANTEE: MCCOY SHEILA R & DA						
2301/0637	8/28/2019	WD	Q	I	02	461,000
GRANTOR: ROSSELAND RAYMOND W &						
GRANTEE: HILD DAVID W & JANE						

BUILDING NOTES

BUILDING DIMENSIONS

BAS=[YR=2005] W5 STP=[YR=2005] N2 W8 S2 E8 $ W12 N2 W7 S2 W2 N10 W4 STP=[YR=2005] N2 W7 S2 E7$ W21 S2 W4 S45 E13 FOP=[YR=2005] S2 E9 N3 W1 N6 W7 S7 W1$ E1 N7 E7 S6 E13 FGR=[YR=2005] S19 E23 N22 STP=[YR=2005] E2 N5 W2 S5$ N5 W8 S4 W15 S4$ N4 E15 N4 E6 N28$ PTR=N15 FUS=[YR=2005] N23 E9 N4 E4 S27 W13$ S15$.

EXTRA FEATURES

LN	OB/XF CODE	DESCRIPTION	BLD	CAP	L	W	UNITS	UT	Adj R	ADJ UNIT PRICE	ORIG COND	YEAR ON	YEAR ACTUAL	Q	% COND	OB/XF MKT VALUE	NOTES
1	0855	CONC PAVER	0	100	0	0	795.00	SF	10.00	10.00	100	2005	2005	3	86	6,837	
2	0855	CONC PAVER	0	100	0	0	132.00	SF	10.00	10.00	100	2005	2005	3	86	1,135	
3	0855	CONC PAVER	0	100	0	0	466.00	SF	10.00	10.00	100	2005	2005	3	86	4,008	
4	0855	CONC PAVER	0	100	0	0	738.00	SF	10.00	10.00	100	2007	2007	3	88	6,494	
5	0861	POOL GUNIT	0	100	30	14	420.00	SF	85.00	85.00	100	2007	2007	3	48	17,136	

LAND DESCRIPTION

TOTAL OB/XF 35,610

LN	USE CODE	CLS	LAND USE DESCRIPTION	CAP	RD	LOC ZONE	FRONT	DEPTH	TOT LND UTS	UNIT TYPE	DT	DPTH FACT	% COND	TOT ADJ	UNIT PRICE	ADJ UNIT PRICE	LAND VALUE	OTHER ADJUSTMENTS AND NOTES	YEAR	DENSITY	DECL	FRZ	YR	CONSRV
1	000100	C	SFR	100		R-1	0.00	0.00	1.00	LT		1.00	1.00	1.10	175,000.00	192,500.00	192,500							

REVIEW DATE 04/22/2024 BY HS Total Acres: 0.00 Total Land Value: 192,500 Market: 0 Agricultural: 0 Common: 192,500 PRINTED 08/06/2024 BY SYS