LOT 3
IN OR 2077/1301
SCHOONER LANDING PB 6/246

QIU HE XUAN &/XIANG MEI JU
2127 SAFE HARBOR LN
FERNANDINA BEACH, FL 32034

2024

00-00-31-167C-0003-0000

BUILDING CHARACTERISTICS

ELEMENT	CD	CONSTRUCTION
Exterior Wall	10	ABOVE AVG 100
Roof Structur	03	GABLE/HIP 100
Roof Cover	03	COMP SHNGL 100
Interior Wall	05	DRYWALL 100
Interior Floo	14	CARPET 80
Interior Floo	12	HARDWOOD 20
Air Condition	03	CENTRAL 100
Heating Type	04	AIR DUCTED 100
Bedrooms		4 100
Bathrooms		4 100
Frame	02	WOOD FRAME 100
Stories	1.	1. 100
Units		0 100
Occupancy	00	NONE 100
Quality	05	Quality Level 05
DOR CODE	0100	SINGLE FAMILY
MAP NUM		MKT AREA 01
NEIGHBORHOOD/LOC	1047.00	

AREA TYPE	TOTAL GROSS AREA	PCT OF BASE	TOT ADJ AREA	SUBAREA MARKET VALUE
BAS	1,850	100	1,850	276,511
BAS	101	100	101	15,096
BAS	156	100	156	23,317
BAS	710	100	710	106,121
FGR	300	55	165	24,662
FOP	228	30	68	10,164
FOP	128	30	38	5,679
FST	39	55	21	3,138
FUS	247	100	247	36,918
FUS	308	100	308	46,035
TOTALS	4,630		3,692	551,826

MARKET ADJUSTMENTS

TYPE	MDL	EFF. AREA	TOT ADJ PTS	EFF. BASE RATE	REPL. COST NEW	AYB	EYB	ECON	FNCT		NORM	% COND
0500	01	3,692	108.9000	163.35	603,088	2001	2005	0	0	0	8.50	91.50

1 SFR CUST – 100% - 2003 Heated Area: 3372 HX Base Yr 2003

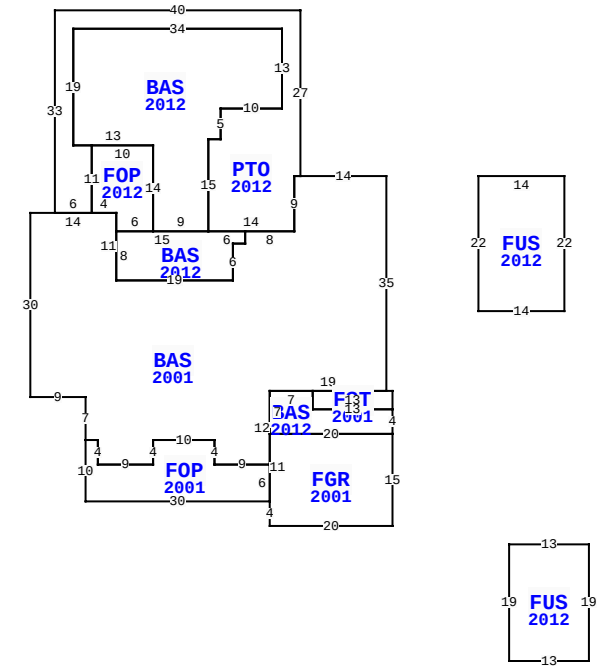

** This building has 11 Sub-Areas

2127 SAFE HARBOR LN, FERNANDINA BEACH

BLD DATE		LGL DATE	
XF DATE		LAND DATE	03/14/2024 MLU
INC DATE		AG DATE	

NASSAU COUNTY PROPERTY

PAGE 1 of 1 2

VALUATION SUMMARY

VALUATION BY		STANDARD
Tax Group: 2	Tax Dist:	
BUILDING MARKET VALUE		551,826
TOTAL MARKET OB/XF VALUE		4,114
TOTAL LAND VALUE - MARKET		192,500
TOTAL MARKET VALUE		748,440
SOH/AGL Deduction		469,885
ASSESSED VALUE		278,555
TOTAL EXEMPTION VALUE	HX HB	50,000
BASE TAXABLE VALUE		228,555
TOTAL JUST VALUE		748,440
NCON VALUE		0
INCOME VALUE		
PREVIOUS YEAR MKT VALUE		668,808

PERMIT NUM	DESCRIPTION	AMT	ISSUED
20111666	H/AC	3,000	09/22/2011
20111320	REMODEL	1,800	08/08/2011
20111145	ADDITION	108,218	07/13/2011
20111146	REPAIR/RRF	2,000	07/13/2011
B011193	NEW CONSTR	60,000	05/25/2001

SALES DATA

OFF RECORD Number	DATE	TYPE INST	Q U	V I	RSN CD	SALE PRICE
2077/1301	10/17/2016	QC	U	I	11	58,000
GRANTOR: QIU HE XUAN						
GRANTEE: QIU HE XUAN & MEI J						
1062/1661	6/14/2002	WD	Q	I		225,000
GRANTOR: BRRCO INC						
GRANTEE: QIU HE XUAN						

BUILDING NOTES

BUILDING DIMENSIONS

BAS=[YR=2001] W14 PTO=[YR=2012] N27 W40 S33 E6 FOP=[YR=2012] E4 S3 BAS=[YR=2012] S8 E19 N6 E2 N2 W6 BAS=[YR=2012] N15 E2 N5 E10 N13 W34 S19 E13 S14 E9$ W15$ E6 N14 W10 S11$ N11 W3 N19 E34 S13 W10 S5 W2 S15 E14 N9 E1$ W1 S9 W8 S2 W2 S6 W19 N11 W14 S30 E9 S7 FOP=[YR=2001] S10E30 FGR=[YR=2001] S4 E20 N15 BAS=[YR=2012] N4 FST=[YR=2001] N3 W13 S3 E13 $ W13 N3 W7 S7 E20$ W20 S11 $ N6 W9 N4 W10 S4 W9N4 W2 $ E2 S4 E9 N4 E10 S4 E9 N12 E19 N35 $PTR=E15 FUS=[YR=2012] E14 S22 W14 N22$ W15$ PTR=E20 S60 FUS=[YR=2012] E13 S19 W13 N19$ N60 W20$.

EXTRA FEATURES

LN	OB/XF CODE	DESCRIPTION	BLD	CAP	L	W	UNITS	UT	Adj R	ADJ UNIT PRICE	ORIG COND	YEAR ON	YEAR ACTUAL	Q	% COND	OB/XF MKT VALUE	NOTES
1	0811	CONCRETE B	0	100	0	0	899.00	SF	5.20	5.20	100	2001	2001	3	80	3,740	
2	0810	CONCRETE A	0	100	0	0	72.00	SF	6.50	6.50	100	2001	2001	3	80	374	

LAND DESCRIPTION

TOTAL OB/XF 4,114

LN	USE CODE	CLS	LAND USE DESCRIPTION	CAP	RD	LOC ZONE	FRONT	DEPTH	TOT LND UTS	UNIT TYPE	DT	DPTH FACT	% COND	TOT ADJ	UNIT PRICE	ADJ UNIT PRICE	LAND VALUE	OTHER ADJUSTMENTS AND NOTES	YEAR	DENSITY	DECL	FRZ	YR	CONSRV
1	000100	C	SFR	100		R-1	0.00	0.00	1.00	LT		1.00	1.00	1.10	175,000.00	192,500.00	192,500							

REVIEW DATE 05/12/2019 BY KBA Total Acres: 0.00 Total Land Value: 192,500 Market: 0 Agricultural: 0 Common: 192,500 PRINTED 08/06/2024 BY SYS