LOT 37
SEASIDE PB 6/161

D'AMICO CHRISTOPHER & JACQUELINE
488 CROSSWIND DRIVE
FERNANDINA BEACH, FL 32034

2024

00-00-31-1679-0037-0000

NASSAU COUNTY PROPERTY

BUILDING CHARACTERISTICS

ELEMENT	CD	CONSTRUCTION
Exterior Wall	16	WD FR STUC 70
Exterior Wall	23	REINF CONC 30
Roof Structur	08	IRREGULAR 100
Roof Cover	03	COMP SHNGL 100
Interior Wall	05	DRYWALL 100
Interior Floo	12	HARDWOOD 70
Interior Floo	15	HARDTILE 30
Air Condition	03	CENTRAL 100
Heating Type	04	AIR DUCTED 100
Bedrooms		5 100
Bathrooms		4 100
Frame	02	WOOD FRAME 100
Stories	1.5	1.5 100
Units		0 100
Occupancy	00	NONE 100
Quality	05	Quality Level 05
DOR CODE	0100	SINGLE FAMILY
MAP NUM		MKT AREA 01
NEIGHBORHOOD/LOC	1080.00	

AREA TYPE	TOTAL GROSS AREA	PCT OF BASE	TOT ADJ AREA	SUBAREA MARKET VALUE
BAS	2,484	100	2,484	403,369
FEP	456	80	365	59,271
FGR	456	55	251	40,759
FOP	108	30	32	5,197
FST	56	55	31	5,034
FUS	440	100	440	71,450
TOTALS	4,000		3,603	585,080

MARKET ADJUSTMENTS

TYPE	MDL	EFF. AREA	TOT ADJ PTS	EFF. BASE RATE	REPL. COST NEW	AYB	EYB	ECON	FNCT		NORM	% COND
0500	01	3,603	120.2850	180.43	650,089	2003	2003	0	0	0	10.00	90.00

1 SFR CUST – 100% - 2024 Heated Area: 2924 HX Base Yr 2024

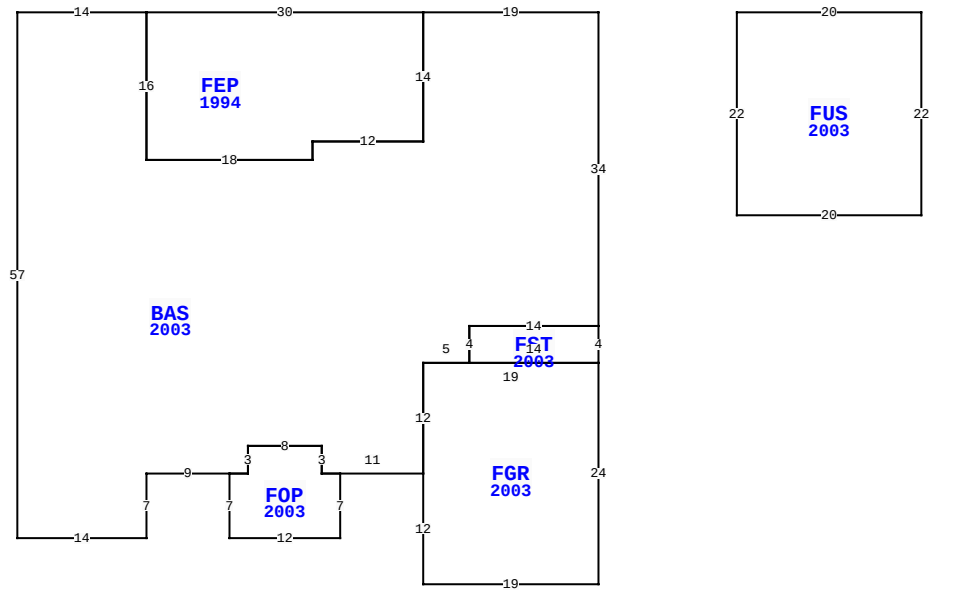

488 CROSSWIND DR, FERNANDINA BEACH

BLD DATE		LGL DATE	
XF DATE		LAND DATE	08/01/2023 MLU
INC DATE		AG DATE	

VALUATION SUMMARY

VALUATION BY		STANDARD
Tax Group: 2	Tax Dist:	
BUILDING MARKET VALUE		585,080
TOTAL MARKET OB/XF VALUE		9,297
TOTAL LAND VALUE - MARKET		225,000
TOTAL MARKET VALUE		819,377
SOH/AGL Deduction		0
ASSESSED VALUE		819,377
TOTAL EXEMPTION VALUE	HX HB	50,000
BASE TAXABLE VALUE		769,377
TOTAL JUST VALUE		819,377
NCON VALUE		0
INCOME VALUE		
PREVIOUS YEAR MKT VALUE		793,266

PERMIT NUM	DESCRIPTION	AMT	ISSUED
2023-0654	POOL/HTR	90,000	12/20/2023
20033472	NEW CONSTR	2,000	07/14/2003
20032418	NEW CONSTR	192,000	01/29/2003

SALES DATA

OFF RECORD Number	DATE	TYPE INST	Q U	V I	RSN CD	SALE PRICE
2650/1298	6/19/2023	WD	Q	I	01	922,500
GRANTOR: SHAFFER KARL U &						
GRANTEE: D'AMICO CHRISTOPHER						
1895/0298	12/10/2013	WD	Q	I	02	437,000
GRANTOR: BEST REBECKA						
GRANTEE: SHAFFER KARL U & NA						

BUILDING NOTES

BUILDING DIMENSIONS

BAS=[YR=2003] W19 FEP=[YR=1994] W30 S16 E18 N2 E12 N14$ S14 W12 S2 W18 N16 W14 S57 E14 N7 E9 FOP=[YR=2003] S7 E12 N7 W2 N3 W8 S3 W2 $ E2 N3 E8 S3 E11 FGR=[YR=2003] S12 E19 N24 FST=[YR=2003] N4 W14 S4 E14 $ W19 S12 $ N12 E5 N4 E14 N34$ PTR= E15 FUS=[YR=2003] E20 S22 W20 N22 $ W15 $.

EXTRA FEATURES

LN	OB/XF CODE	DESCRIPTION	BLD	CAP	L	W	UNITS	UT	Adj R	ADJ UNIT PRICE	ORIG COND	YEAR ON	YEAR ACTUAL	Q	% COND	OB/XF MKT VALUE	NOTES
1	0500	FP-PRE FAB	0	100	0	0	1.00	UT	3,500.00	3,500.00	100	2003	2003	3	87	3,045	
2	0835	QUARY TILE	0	100	4	8	32.00	SF	20.00	20.00	100	2003	2003	3	83	531	
3	0855	CONC PAVER	0	100	0	0	123.00	SF	7.00	7.00	100	2014	2014	3	95	818	
4	0855	CONC PAVER	0	100	0	0	714.00	SF	7.00	7.00	100	2014	2014	3	95	4,748	
5	1242	WD DECK A	0	100	9	4	36.00	SF	15.00	15.00	100	2003	2003	3	21	113	
6	1242	WD DECK A	0	100	5	4	20.00	SF	10.00	10.00	100	2003	2003	3	21	42	

LAND DESCRIPTION

TOTAL OB/XF 9,297

LN	USE CODE	CLS	LAND USE DESCRIPTION	CAP	RD	LOC ZONE	FRONT	DEPTH	TOT LND UTS	UNIT TYPE	DT	DPTH FACT	% COND	TOT ADJ	UNIT PRICE	ADJ UNIT PRICE	LAND VALUE	OTHER ADJUSTMENTS AND NOTES	YEAR	DENSITY	DECL	FRZ	YR	CONSRV
1	000100	C	SFR	100	0003	R-1	0.00	0.00	1.00	LT		1.00	1.00	1.00	225,000.00	225,000.00	225,000							

REVIEW DATE 05/12/2019 BY KBA Total Acres: 0.00 Total Land Value: 225,000 Market: 0 Agricultural: 0 Common: 225,000 PRINTED 08/06/2024 BY SYS