LOT 11
SEA ISLAND PLANTATION PB 5/275

SIEGEL GLENN ERIC & JOY L/E/
6572 JACKIE WAY
LAKE WORTH, FL 33467

2024

00-00-31-1678-0011-0000

BUILDING CHARACTERISTICS

ELEMENT	CD	CONSTRUCTION
Exterior Wall	10	ABOVE AVG 100
Roof Structur	08	IRREGULAR 100
Roof Cover	03	COMP SHNGL 100
Interior Wall	05	DRYWALL 100
Interior Floo	12	HARDWOOD 60
Interior Floo	14	CARPET 40
Air Condition	03	CENTRAL 100
Heating Type	04	AIR DUCTED 100
Bedrooms		3 100
Bathrooms		3 100
Frame	02	WOOD FRAME 100
Stories	1.	1. 100
Units		0 100
Occupancy	00	NONE 100
Quality	05	Quality Level 05
DOR CODE	0100	SINGLE FAMILY
MAP NUM		MKT AREA 01
NEIGHBORHOOD/LOC	1080.00	

AREA TYPE	TOTAL GROSS AREA	PCT OF BASE	TOT ADJ AREA	SUBAREA MARKET VALUE
BAS	176	100	176	28,781
BAS	1,713	100	1,713	280,125
FGR	572	55	315	51,511
FOP	132	30	40	6,542
FOP	290	30	87	14,227
FUS	210	100	210	34,341
TOTALS	3,093		2,541	415,526

MARKET ADJUSTMENTS

TYPE	MDL	EFF. AREA	TOT ADJ PTS	EFF. BASE RATE	REPL. COST NEW	AYB	EYB	ECON	FNCT		NORM	% COND
0500	01	2,541	122.4960	183.74	466,883	1994	2000	0	0	0	11.00	89.00

1 SFR CUST – 0% - 0 Heated Area: 2099 HX Base Yr

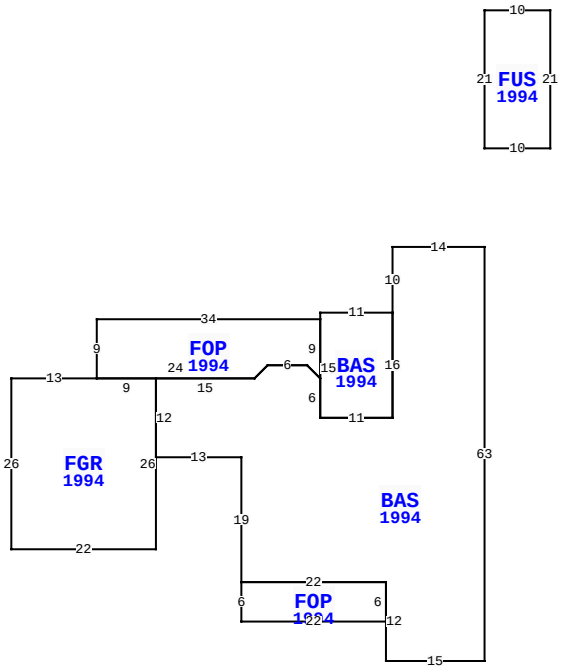

BLD DATE	03/26/2009	KK	LGL DATE
XF DATE			LAND DATE 08/01/2023 MLU
INC DATE			AG DATE

2805 MAGNOLIA WOODS CT, FERNANDINA BEACH

NASSAU COUNTY PROPERTY

PAGE 1 of 1 2

VALUATION SUMMARY

VALUATION BY	STANDARD
Tax Group: 2	Tax Dist:
BUILDING MARKET VALUE	415,526
TOTAL MARKET OB/XF VALUE	26,488
TOTAL LAND VALUE - MARKET	225,000
TOTAL MARKET VALUE	667,014
SOH/AGL Deduction	19,249
ASSESSED VALUE	647,765
TOTAL EXEMPTION VALUE	0
BASE TAXABLE VALUE	647,765
TOTAL JUST VALUE	667,014
NCON VALUE	0
INCOME VALUE	
PREVIOUS YEAR MKT VALUE	649,841

PERMIT NUM	DESCRIPTION	AMT	ISSUED
20090848	H/AC	900	07/01/2009
20020004	XFOB	0	01/08/2002
20012602	SWIM POOL	0	12/05/2001
8083	NEW CONSTR	81,165	01/06/1994

SALES DATA

OFF RECORD Number	DATE	TYPE INST	Q / U	V / I	RSN CD	SALE PRICE
2619/1665	1/30/2023	WD	U	I	11	100
GRANTOR: SIEGEL GLENN ERIC & J						
GRANTEE: SIEGEL FAMILY TRUST						
2510/0995	10/29/2021	WD	Q	I	01	720,100
GRANTOR: MAHARREY MICHAEL R &						
GRANTEE: SIEGEL GLENN ERIC &						

BUILDING NOTES

BUILDING DIMENSIONS

BAS=[YR=1994] W14 S10 BAS=[YR=1994] W11 S1 FOP=[YR=1994] W34 S9 FGR=[YR=1994] W13 S26 E22 N26 W9$ E24 R2 U2 E6 R2 D2 N9$ S15 E11 N16$ S16 W11 N6 L2 U2 W6 D2 L2 W15 S12 E13 S19 FOP=[YR=1994] S6 E22 N6 W22$ E22 S12 E15 N63$ PTR=N15 FUS=[YR=1994] N21 E10 S21 W10$ S15$.

EXTRA FEATURES

LN	OB/XF CODE	DESCRIPTION	BLD	CAP	L	W	UNITS	UT	Adj R	ADJ UNIT PRICE	ORIG COND	YEAR ON	YEAR ACTUAL	Q	% COND	OB/XF MKT VALUE	NOTES
1	0810	CONCRETE A	0	0	0	0	1,323.00	SF	6.50	6.50	100	1994	1994	3	68	5,848	
2	0500	FP-PRE FAB	0	0	0	0	1.00	UT	3,500.00	3,500.00	100	1994	1994	3	76	2,660	
3	0910	SCRN RM L	0	0	0	0	855.00	SF	15.00	15.00	100	2002	2002	3	20	2,565	
4	0845	KOOL DECK	0	0	0	0	517.00	SF	14.50	14.50	100	2002	2002	3	82	6,147	
5	0861	POOL GUNIT	0	0	0	0	376.00	SF	85.00	85.00	100	2002	2002	3	29	9,268	

LAND DESCRIPTION

TOTAL OB/XF 26,488

LN	USE CODE	CLS	LAND USE DESCRIPTION	CAP	RD	LOC ZONE	FRONT	DEPTH	TOT LND UTS	UNIT TYPE	DT	DPTH FACT	% COND	TOT ADJ	UNIT PRICE	ADJ UNIT PRICE	LAND VALUE	OTHER ADJUSTMENTS AND NOTES	YEAR	DENSITY	DECL	FRZ	YR	CONSRV
1	000100	C	SFR	0	0006	R-1	0.00	0.00	1.00	LT		1.00	1.00	1.00	225,000.00	225,000.00	225,000							

REVIEW DATE 01/14/2021 BY TWA Total Acres: 0.00 Total Land Value: 225,000 Market: 0 Agricultural: 0 Common: 225,000 PRINTED 08/06/2024 BY SYS