LOT 7
SEA ISLAND PLANTATION PB 5/275

LEVINE JAY & MIMI
1017 MAGNOLIA WOODS CT
FERNANDINA BEACH, FL 32034

2024

00-00-31-1678-0007-0000

NASSAU COUNTY PROPERTY

BUILDING CHARACTERISTICS

ELEMENT	CD	CONSTRUCTION
Exterior Wall	10	ABOVE AVG 100
Roof Structur	08	IRREGULAR 100
Roof Cover	03	COMP SHNGL 100
Interior Wall	05	DRYWALL 100
Interior Floo	14	CARPET 80
Interior Floo	11	CLAY TILE 20
Air Condition	03	CENTRAL 100
Heating Type	04	AIR DUCTED 100
Bedrooms		3 100
Bathrooms		2.5 100
Frame	02	WOOD FRAME 100
Stories	2.	2. 100
Units		0 100
Occupancy	00	NONE 100
Quality	05	Quality Level 05

DOR CODE 0100 SINGLE FAMILY
MAP NUM | MKT AREA 01
NEIGHBORHOOD/LOC 1080.00

AREA TYPE	TOTAL GROSS AREA	PCT OF BASE	TOT ADJ AREA	SUBAREA MARKET VALUE
BAS	1,366	100	1,366	222,931
FGR	506	55	278	45,369
FOP	240	30	72	11,750
FSP	316	40	126	20,563
FUS	936	100	936	152,755
SFB	36	80	29	4,732
TOTALS	3,400		2,807	458,101

MARKET ADJUSTMENTS

TYPE	MDL	EFF. AREA	TOT ADJ PTS	EFF. BASE RATE	REPL. COST NEW	AYB	EYB	ECON	FNCT		NORM	% COND
0500	01	2,807	118.9056	178.36	500,657	1993	2005	0	0	0	8.50	91.50

1 SFR CUST – 100% - 2017 Heated Area: 2331 HX Base Yr 2017

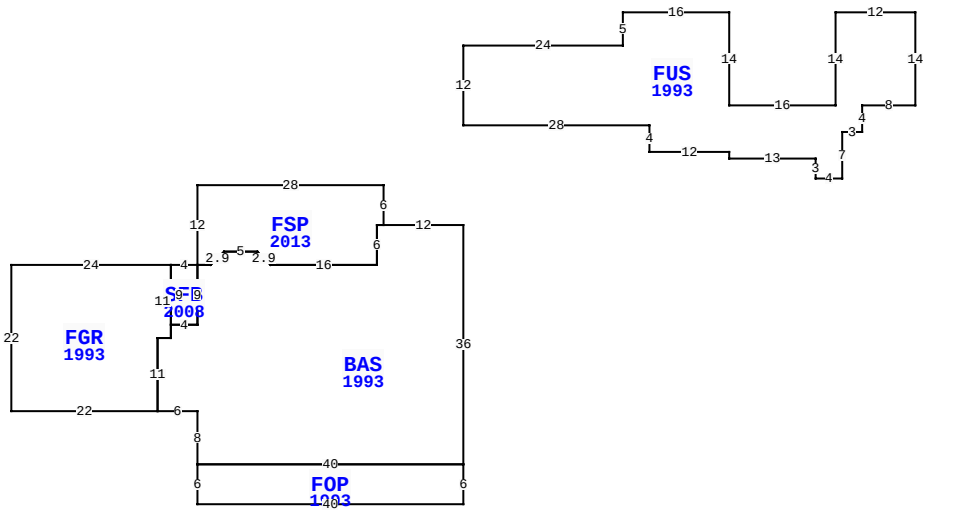

1017 MAGNOLIA WOODS CT, FERNANDINA BEACH

BLD DATE		LGL DATE	
XF DATE		LAND DATE	08/01/2023 MLU
INC DATE		AG DATE	

VALUATION SUMMARY

VALUATION BY		STANDARD
Tax Group: 2	Tax Dist:	
BUILDING MARKET VALUE		458,101
TOTAL MARKET OB/XF VALUE		59,235
TOTAL LAND VALUE - MARKET		225,000
TOTAL MARKET VALUE		742,336
SOH/AGL Deduction		275,470
ASSESSED VALUE		466,866
TOTAL EXEMPTION VALUE	HX HB	50,000
BASE TAXABLE VALUE		416,866
TOTAL JUST VALUE		742,336
NCON VALUE		0
INCOME VALUE		
PREVIOUS YEAR MKT VALUE		723,485

PERMIT NUM	DESCRIPTION	AMT	ISSUED
20170692	SWIM POOL	40,000	03/07/2017
20131714	EXTPRCH	18,000	07/22/2013
20131182	2 TON MINI SPLIT	0	05/24/2013
20130655	POD IN DRIVEWAY	0	04/01/2013
20122022	RE-ROOF W/30YR AR	10,500	09/28/2012
20100947	H/AC	3,500	06/08/2010

SALES DATA

OFF RECORD Number	DATE	TYPE INST	Q U	V I	RSN CD	SALE PRICE
2710/1875	5/08/2024	WD	Q	I	01	1,280,100
GRANTOR: LUCEY TIMOTHY D & KRI						
GRANTEE: LEVINE JAY & MIMI						
2077/1951	10/17/2016	WD	Q	I	01	530,000
GRANTOR: NELSON JON M & JUDY						
GRANTEE: LUCEY TIMOTHY D & K						

BUILDING NOTES

BUILDING DIMENSIONS

BAS=[YR=1993] W12 FSP=[YR=2013] N6 W28 S12 E2 U2 R2 E5 D2 R2 E16 N6 E1$ W1 S6 W16 U2 L2 W5 D2 L2 W2 SFB=[YR=2008] W4 FGR=[YR=1993] W24 S22 E22 N11 E2 N11$ S9 E4 N9$ S9 W4 S2 W2 S11 E6 S8 FOP=[YR=1993] S6 E40 N6 W40$ E40 N36$ PTR=N15 FUS=[YR=1993] N12 E24 N5 E16 S14 E16 N14 E12 S14 W8 S4 W3 S7 W4 N3 W13 N1 W12 N4 W28$ S15$.

EXTRA FEATURES

LN	OB/XF CODE	DESCRIPTION	BLD	CAP	L	W	UNITS	UT	Adj R	ADJ UNIT PRICE	ORIG COND	YEAR ON	YEAR ACTUAL	Q	% COND	OB/XF MKT VALUE	NOTES
1	0812	CONCRETE C	0	100	0	0	195.00	SF	4.00	4.00	100	1993	1993	3	66	515	
2	0500	FP-PRE FAB	0	100	0	0	1.00	UT	3,500.00	3,500.00	100	1993	1993	3	74	2,590	
3	0855	CONC PAVER	0	100	0	0	980.00	SF	7.00	7.00	100	2014	2014	3	95	6,517	
4	0861	POOL GUNIT	0	100	0	0	520.00	SF	85.00	85.00	100	2017	2017	3	84	37,128	
5	0855	CONC PAVER	0	100	0	0	506.00	SF	10.00	10.00	100	2017	2017	3	97	4,908	
6	0462	ST/AL FNC	0	100	0	0	902.00	SF	10.00	10.00	100	2017	2017	3	84	7,577	

LAND DESCRIPTION

TOTAL OB/XF 59,235

LN	USE CODE	CLS	LAND USE DESCRIPTION	CAP	RD	LOC ZONE	FRONT	DEPTH	TOT LND UTS	UNIT TYPE	DT	DPTH FACT	% COND	TOT ADJ	UNIT PRICE	ADJ UNIT PRICE	LAND VALUE	OTHER ADJUSTMENTS AND NOTES	YEAR	DENSITY	DECL	FRZ	YR	CONSRV
1	000100	C	SFR	100	0006	R-1	0.00	0.00	1.00	LT		1.00	1.00	1.00	225,000.00	225,000.00	225,000							

REVIEW DATE 04/03/2024 BY KBA Total Acres: 0.00 Total Land Value: 225,000 Market: 0 Agricultural: 0 Common: 225,000 PRINTED 08/06/2024 BY SYS