LOT 5
SEA ISLAND PLANTATION PB5/275

2810 ISLAND PLANTATION DR LLC
750 HAMMOND DRIVE, BLDG 1 SUITE #200
SANDY SPRINGS, GA 30328

2024

00-00-31-1678-0005-0000

BUILDING CHARACTERISTICS

ELEMENT	CD	CONSTRUCTION
Exterior Wall	10	ABOVE AVG 100
Roof Structur	08	IRREGULAR 100
Roof Cover	03	COMP SHNGL 100
Interior Wall	05	DRYWALL 100
Interior Floo	12	HARDWOOD 70
Interior Floo	15	HARDTILE 30
Air Condition	03	CENTRAL 100
Heating Type	04	AIR DUCTED 100
Bedrooms		4 100
Bathrooms		3.5 100
Frame	02	WOOD FRAME 100
Stories	2.	2. 100
Units		0 100
Occupancy	00	NONE 100
Quality	05	Quality Level 05
DOR CODE	0100	SINGLE FAMILY
MAP NUM		MKT AREA 01
NEIGHBORHOOD/LOC	1080.00	

AREA TYPE	TOTAL GROSS AREA	PCT OF BASE	TOT ADJ AREA	SUBAREA MARKET VALUE
BAS	1,452	100	1,452	236,628
FGR	516	55	284	46,283
FOP	240	30	72	11,734
FUS	1,180	100	1,180	192,301
TOTALS	3,388		2,988	486,946

MARKET ADJUSTMENTS

TYPE	MDL	EFF. AREA	TOT ADJ PTS	EFF. BASE RATE	REPL. COST NEW	AYB	EYB	ECON	FNCT		NORM	% COND
0500	01	2,988	123.4596	185.19	553,348	1994	1998	0	0	0	12.00	88.00

1 SFR CUST – 0% - 0 Heated Area: 2632 HX Base Yr

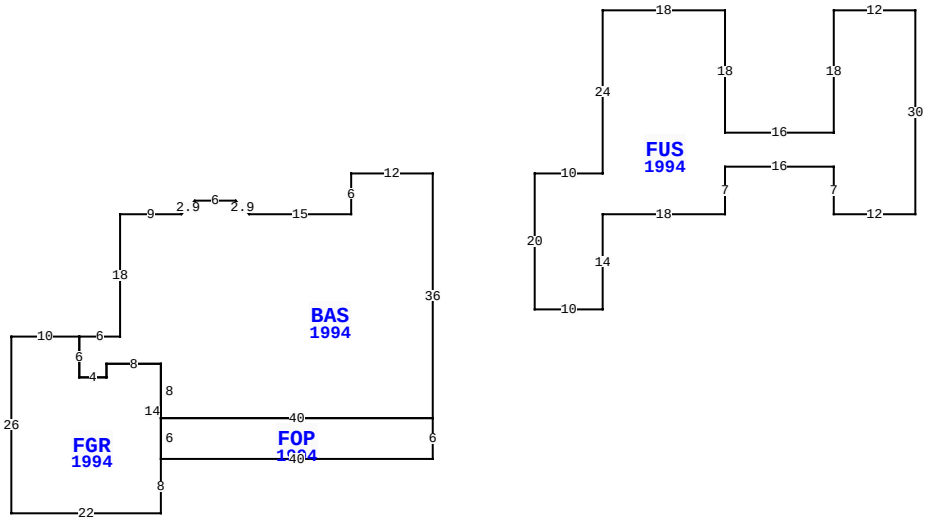

2810 ISLAND PLANTATION DR, FERNANDINA BEACH

BLD DATE		LGL DATE	
XF DATE		LAND DATE	08/01/2023 MLU
INC DATE		AG DATE	

NASSAU COUNTY PROPERTY

PAGE 1 of 1 2

VALUATION SUMMARY

VALUATION BY	STANDARD
Tax Group: 2	Tax Dist:
BUILDING MARKET VALUE	486,946
TOTAL MARKET OB/XF VALUE	13,580
TOTAL LAND VALUE - MARKET	225,000
TOTAL MARKET VALUE	725,526
SOH/AGL Deduction	79,249
ASSESSED VALUE	646,277
TOTAL EXEMPTION VALUE	0
BASE TAXABLE VALUE	646,277
TOTAL JUST VALUE	725,526
NCON VALUE	0
INCOME VALUE	
PREVIOUS YEAR MKT VALUE	703,997

PERMIT NUM	DESCRIPTION	AMT	ISSUED
20131175	REMDL.PLUMBING	0	05/24/2013
20131153	OUTLETS	950	05/23/2013
20131153	REMDL.ELEC.OUTLET	0	05/23/2013
20131026	KIT.&BATH RENOVAT	0	05/06/2013
20122105	REFINISH POOL,DEC	25,000	10/12/2012
20121663	PORCH AND PAVERS	7,000	08/14/2012

SALES DATA

OFF RECORD Number	DATE	TYPE INST	Q / U	V / I	RSN CD	SALE PRICE
2277/1625	3/18/2019	WD	U	I	11	100
GRANTOR: HENNING CYNTHIA L						
GRANTEE: 2810 ISLAND PLANTAT						
2270/0820	3/18/2019	WD	U	I	11	100
GRANTOR: HENNING DANIEL C & CY						
GRANTEE: HENNING CYNTHIA L						

BUILDING NOTES

BUILDING DIMENSIONS

BAS=[YR=1994] W12 S6 W15 U2 L2 W6 D2 L2 W9 S18 W6
FGR=[YR=1994] W10 S26 E22 N8 FOP=[YR=1994] E40 N6 W40 S6$
N14 W8 S2 W4 N6$ S6 E4 N2 E8 S8 E40 N36$ PTR=E15
FUS=[YR=1994] E10 N24 E18 S18 E16 N18 E12 S30 W12 N7 W16 S7
W18 S14 W10 N20$ W15$.

EXTRA FEATURES

LN	OB/XF CODE	DESCRIPTION	BLD	CAP	L	W	UNITS	UT	Adj R	ADJ UNIT PRICE	ORIG COND	YEAR ON	YEAR ACTUAL	Q	% COND	OB/XF MKT VALUE	NOTES
1	0861	POOL GUNIT	0	0	0	0	378.00	SF	85.00	85.00	100	1994	1994	3	20	6,426	
2	0845	KOOL DECK	0	0	0	0	318.00	SF	7.25	7.25	100	1994	1994	3	68	1,568	
3	0875	HOT TUB	0	0	0	0	1.00	UT	1,200.00	1,200.00	100	1994	1994	3	20	240	
4	0810	CONCRETE A	0	0	16	10	160.00	SF	6.50	6.50	100	1994	1994	3	68	707	
5	0810	CONCRETE A	0	0	37	3	111.00	SF	6.50	6.50	100	1994	1994	3	68	491	
6	0810	CONCRETE A	0	0	53	16	848.00	SF	6.50	6.50	100	1994	1994	3	68	3,748	
7	0871	POOL HTR R	0	0	0	0	1.00	UT	2,000.00	2,000.00	100	1994	1994	3	20	400	

LAND DESCRIPTION

TOTAL OB/XF 13,580

LN	USE CODE	CLS	LAND USE DESCRIPTION	CAP	RD	LOC ZONE	FRONT	DEPTH	TOT LND UTS	UNIT TYPE	DT	DPTH FACT	% COND	TOT ADJ	UNIT PRICE	ADJ UNIT PRICE	LAND VALUE	OTHER ADJUSTMENTS AND NOTES	YEAR	DENSITY	DECL	FRZ	YR	CONSRV
1	000100	C	SFR	0		R-1	0.00	0.00	1.00	LT		1.00	1.00	1.00	225,000.00	225,000.00	225,000							

REVIEW DATE 05/12/2019 BY KBA Total Acres: 0.00 Total Land Value: 225,000 Market: 0 Agricultural: 0 Common: 225,000 PRINTED 08/06/2024 BY SYS