LOTS 118 & 119
IN OR 1716/2000
THE RESIDENCE @ AMELIA

SUDDATH JAKE R & SANDRA L
2176 KETCH COURT
FERNANDINA BEACH, FL 32034

2024

00-00-31-1651-0118-0000

BUILDING CHARACTERISTICS

ELEMENT	CD	CONSTRUCTION
Exterior Wall	05	AVERAGE 100
Roof Structur	03	GABLE/HIP 100
Roof Cover	03	COMP SHNGL 100
Interior Wall	05	DRYWALL 100
Interior Floo	14	CARPET 60
Interior Floo	11	CLAY TILE 40
Air Condition	03	CENTRAL 100
Heating Type	04	AIR DUCTED 100
Bedrooms		4 100
Bathrooms		3.5 100
Frame	02	WOOD FRAME 100
Stories	2.	2. 100
Units		0 100
Occupancy	00	NONE 100
Quality	04	Quality Level 04
DOR CODE	0100	SINGLE FAMILY
MAP NUM		MKT AREA 01
NEIGHBORHOOD/LOC	1049.00	

AREA TYPE	TOTAL GROSS AREA	PCT OF BASE	TOT ADJ AREA	SUBAREA MARKET VALUE
BAS	1,024	100	1,024	143,111
BAS	70	100	70	9,783
BAS	1,244	100	1,244	173,858
DCK	100	10	10	1,397
FGR	1,258	55	692	96,712
FOP	200	30	60	8,385
FOP	89	30	27	3,773
FSP	154	40	62	8,665
FUS	1,024	100	1,024	143,111
STP	72	10	7	978
TOTALS	5,235		4,220	589,775

MARKET ADJUSTMENTS

TYPE	MDL	EFF. AREA	TOT ADJ PTS	EFF. BASE RATE	REPL. COST NEW	AYB	EYB	ECON	FNCT		NORM	% COND
0500	01	4,220	101.8248	152.74	644,563	2000	2005	0	0	0	8.50	91.50

1 SFR CUST – 100% - 2011 Heated Area: 3362 HX Base Yr 2011

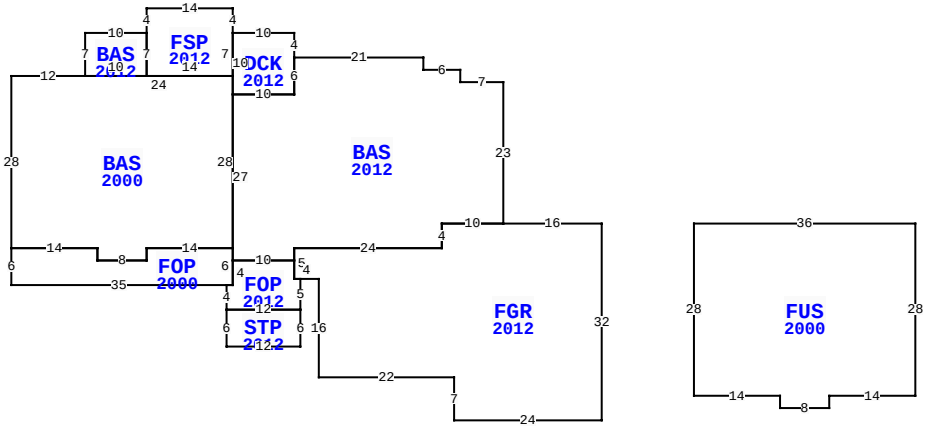

2176 KETCH CT, FERNANDINA BEACH

BLD DATE		LGL DATE	
XF DATE		LAND DATE	
INC DATE		AG DATE	

NASSAU COUNTY PROPERTY

PAGE 1 of 1 2

VALUATION SUMMARY

VALUATION BY		STANDARD
Tax Group: 2	Tax Dist:	
BUILDING MARKET VALUE		589,775
TOTAL MARKET OB/XF VALUE		17,413
TOTAL LAND VALUE - MARKET		272,000
TOTAL MARKET VALUE		879,188
SOH/AGL Deduction		437,771
ASSESSED VALUE		441,417
TOTAL EXEMPTION VALUE	HX HB	50,000
BASE TAXABLE VALUE		391,417
TOTAL JUST VALUE		879,188
NCON VALUE		0
INCOME VALUE		
PREVIOUS YEAR MKT VALUE		853,022

PERMIT NUM	DESCRIPTION	AMT	ISSUED
20120137	WTR HTR SOLAR	5,756	01/27/2012
20120135	GAS PIPING	695	01/26/2012
20120073	SECURITY	1,563	01/17/2012
20120064	NEW CONSTR	2,000	01/13/2012
20112255	H/AC	10,000	12/20/2011
20112081	REMODEL	1,500	11/17/2011

SALES DATA

OFF RECORD Number	DATE	TYPE INST	Q / U	V / I	RSN CD	SALE PRICE
1716/1446	12/28/2010	QC	U	I	11	100
GRANTOR: RAYLYNN PROPERTIES LL						
GRANTEE: SUDDATH JAKE R & SA						
1067/0857	7/09/2002	WD	U	I	07	100
GRANTOR: FOURNIER JOHN E & KAM						
GRANTEE: RAYLYNN PROPERTIES						

BUILDING NOTES

BUILDING DIMENSIONS

FGR=[YR=2012] W16 BAS=[YR=2012] N23 W7 N2 W6 N2 W21 DCK=[YR=2012] N4 W10 FSP=[YR=2012] N4 W14 S4 BAS=[YR=2012] W10 S7 BAS=[YR=2000] W12 S28 FOP=[YR=2000] S6 E35 FOP=[YR=2012] S4 STP=[YR=2012] S6 E12 N6 W12$ E12 N5 W1 N3 W10 S4 W1 $ E1 N6 W14 S2 W8 N2 W14$ E14 S2 E8 N2 E14 N28 W24$ E10 N7$ S7 E14 N7$ S10 E10 N6$ S6 W10 S27 E10 N2 E24 N4 E10$ W10 S4 W24 S5 E4 S16 E22 S7 E24 N32$ PTR=E15 FUS=[YR=2000] E36 S28 W14 S2 W8 N2 W14 N28$ W15$.

EXTRA FEATURES

LN	OB/XF CODE	DESCRIPTION	BLD	CAP	L	W	UNITS	UT	Adj R	ADJ UNIT PRICE	ORIG COND	YEAR ON	YEAR ACTUAL	Q	% COND	OB/XF MKT VALUE	NOTES
1	1242	WD DECK A	0	100	7	4	28.00	SF	10.00	10.00	100	2000	2000	3	20	56	
2	1242	WD DECK A	0	100	66	3	198.00	SF	10.00	10.00	100	2012	2012	3	55	1,089	
3	0504	FP-ELECTRI	0	100	0	0	1.00	UT	2,000.00	2,000.00	100	2012	2012	3	95	1,900	
4	0855	CONC PAVER	0	100	0	0	2,047.00	SF	7.00	7.00	100	2012	2012	3	93	13,326	
5	0855	CONC PAVER	0	100	0	0	160.00	SF	7.00	7.00	100	2012	2012	3	93	1,042	

LAND DESCRIPTION

TOTAL OB/XF 17,413

LN	USE CODE	CLS	LAND USE DESCRIPTION	CAP	RD	LOC ZONE	FRONT	DEPTH	TOT LND UTS	UNIT TYPE	DT	DPTH FACT	% COND	TOT ADJ	UNIT PRICE	ADJ UNIT PRICE	LAND VALUE	OTHER ADJUSTMENTS AND NOTES	YEAR	DENSITY	DECL	FRZ	YR	CONSRV
1	000100	C	SFR	100	0003	R-2	0.00	0.00	1.00	LT		1.00	1.00	1.00	160,000.00	160,000.00	160,000							
2	000100	C	SFR	100	0003	R-2	0.00	0.00	1.00	LT		1.00	1.00	0.70	160,000.00	112,000.00	112,000							

REVIEW DATE 05/12/2019 BY KBA Total Acres: 0.00 Total Land Value: 272,000 Market: 0 Agricultural: 0 Common: 272,000 PRINTED 08/06/2024 BY SYS