LOT 47
THE RESIDENCE @ AMELIA
LANDINGS #3 PB 5/251

CHURCH CHRISTINA & ERIC &/SKARPALEZOS LEE
2191 HIGH RIGGER PLACE
FERNANDINA BEACH, FL 32034

2024

00-00-31-1651-0047-0000

NASSAU COUNTY PROPERTY

BUILDING CHARACTERISTICS

ELEMENT	CD	CONSTRUCTION
Exterior Wall	05	AVERAGE 100
Roof Structur	03	GABLE/HIP 100
Roof Cover	03	COMP SHNGL 100
Interior Wall	05	DRYWALL 100
Interior Floo	13	LVT/LAMNT 70
Interior Floo	11	CLAY TILE 30
Air Condition	03	CENTRAL 100
Heating Type	04	AIR DUCTED 100
Bedrooms		4 100
Bathrooms		3 100
Frame	02	WOOD FRAME 100
Stories	1.	1. 100
Units		0 100
Occupancy	00	NONE 100
Quality	04	Quality Level 04
DOR CODE	0100	SINGLE FAMILY
MAP NUM		MKT AREA 01
NEIGHBORHOOD/LOC	1049.00	

AREA TYPE	TOTAL GROSS AREA	PCT OF BASE	TOT ADJ AREA	SUBAREA MARKET VALUE
BAS	1,706	100	1,706	257,090
BAS	417	100	417	62,841
DCK	220	10	22	3,316
DCK	440	10	44	6,631
FGR	400	55	220	33,153
FOP	20	30	6	904
FUS	240	100	240	36,167
PTO	10	5	0	0
TOTALS	3,453		2,655	400,102

MARKET ADJUSTMENTS

TYPE	MDL	EFF. AREA	TOT ADJ PTS	EFF. BASE RATE	REPL. COST NEW	AYB	EYB	ECON	FNCT		NORM	% COND
0500	01	2,655	113.1984	169.80	450,819	1996	2000	0	0	0	11.25	88.75

1 SFR CUST – 0% - 2024 Heated Area: 2363 HX Base Yr

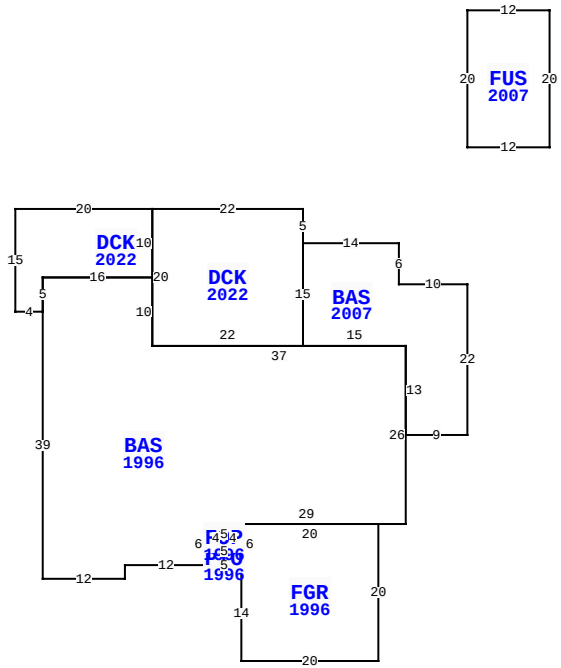

2191 HIGH RIGGER PL, FERNANDINA BEACH

BLD DATE		LGL DATE	
XF DATE		LAND DATE	
INC DATE		AG DATE	

VALUATION SUMMARY

VALUATION BY	STANDARD
Tax Group: 2	Tax Dist:
BUILDING MARKET VALUE	400,102
TOTAL MARKET OB/XF VALUE	5,306
TOTAL LAND VALUE - MARKET	160,000
TOTAL MARKET VALUE	565,408
SOH/AGL Deduction	0
ASSESSED VALUE	565,408
TOTAL EXEMPTION VALUE	0
BASE TAXABLE VALUE	565,408
TOTAL JUST VALUE	565,408
NCON VALUE	0
INCOME VALUE	
PREVIOUS YEAR MKT VALUE	547,615

PERMIT NUM	DESCRIPTION	AMT	ISSUED
20071754	OTHER	1,300	09/17/2007
20071339	REMODEL	500	07/18/2007
20071020	ELEC OTHER	15,000	06/06/2007
20070663	OTHER	2,000	04/20/2007
20070671	H/AC	1,000	04/20/2007
20070635	ELEC OTHER	1,500	04/17/2007

SALES DATA

OFF RECORD Number	DATE	TYPE INST	Q / U	V / I	RSN CD	SALE PRICE
2628/0648	3/27/2023	WD	Q	I	01	660,000
GRANTOR: NEESE TAYVE						
GRANTEE: CHURCH CHRISTINA &						
2113/1349	4/14/2017	WD	Q	I	01	340,000
GRANTOR: WALKER KENNETH W JR &						
GRANTEE: NEESE TAYVE						

BUILDING NOTES

BUILDING DIMENSIONS

BAS=[YR=2007] W10 N6 W14 DCK=[YR=2022] N5 W22 DCK=[YR=2022] W20 S15 E4 BAS=[YR=1996] S39 E12 N2 E12 PTO=[YR=1996] E5 FGR=[YR=1996] S14 E20N20 W20 FOP=[YR=1996] W5 S4 E5 N4$ S6$ N2 W5 S2$ N6 E29 N26 W37 N10 W16 S5$ N5 E16 N10$ S20 E22 N15$ S15 E15 S13 E9 N22$ PTR= N20 FUS=[YR=2007] N20 E12 S20 W12$ S20$.

EXTRA FEATURES

LN	OB/XF CODE	DESCRIPTION	BLD	CAP	L	W	UNITS	UT	Adj R	ADJ UNIT PRICE	ORIG COND	YEAR ON	YEAR ACTUAL	Q	% COND	OB/XF MKT VALUE	NOTES
1	0811	CONCRETE B	0	0	0	0	600.00	SF	5.20	5.20	100	1996	1996	3	72	2,246	
2	0810	CONCRETE A	0	0	21	3	63.00	SF	6.50	6.50	100	1996	1996	3	72	295	
3	0500	FP-PRE FAB	0	0	0	0	1.00	UT	3,500.00	3,500.00	100	1996	1996	3	79	2,765	

LAND DESCRIPTION

TOTAL OB/XF 5,306

LN	USE CODE	CLS	LAND USE DESCRIPTION	CAP	RD	LOC ZONE	FRONT	DEPTH	TOT LND UTS	UNIT TYPE	DT	DPTH FACT	% COND	TOT ADJ	UNIT PRICE	ADJ UNIT PRICE	LAND VALUE	OTHER ADJUSTMENTS AND NOTES	YEAR	DENSITY	DECL	FRZ	YR	CONSRV
1	000100	C	SFR	0	0003	R-2	0.00	0.00	1.00	LT		1.00	1.00	1.00	160,000.00	160,000.00	160,000							

REVIEW DATE 05/12/2019 BY KBA Total Acres: 0.00 Total Land Value: 160,000 Market: 0 Agricultural: 0 Common: 160,000 PRINTED 08/06/2024 BY SYS