BLOCK 10 N'LY 61 FT OF LOT 5
IN OR 2064/1968
THE PARK PB 4/28

CLEVELAND ROBERT A &/VAN PARYS STEPHANIE
530 ANSLEY ST
DECATUR, GA 30030

2024

00-00-31-1630-0010-0051

BUILDING CHARACTERISTICS

ELEMENT	CD	CONSTRUCTION
Exterior Wall	10	ABOVE AVG 50
Exterior Wall	16	WD FR STUC 50
Roof Structur	03	GABLE/HIP 100
Roof Cover	03	COMP SHNGL 100
Interior Wall	05	DRYWALL 100
Interior Floo	14	CARPET 80
Interior Floo	08	SHT VINYL 20
Air Condition	03	CENTRAL 100
Heating Type	04	AIR DUCTED 100
Bedrooms		3 100
Bathrooms		2 100
Frame	07	SPECIAL 100
Stories	2.	2. 100
Units		0 100
BUD8 Adjustme	02	DIST FB 100
Occupancy	00	NONE 100
Quality	06	Quality Level 06
DOR CODE	0100	SINGLE FAMILY
MAP NUM		MKT AREA 01
NEIGHBORHOOD/LOC	1040.00	

AREA TYPE	TOTAL GROSS AREA	PCT OF BASE	TOT ADJ AREA	SUBAREA MARKET VALUE
BAL	150	15	22	3,842
BAL	216	15	32	5,589
BAL	32	15	5	874
BAS	1,250	100	1,250	218,333
FGR	480	55	264	46,112
FST	110	55	60	10,480
FST	480	55	264	46,112
FST	110	55	60	10,480
PTO	32	5	2	350
STR	52	10	5	874
TOTALS	3,656		2,136	373,087

MARKET ADJUSTMENTS

TYPE	MDL	EFF. AREA	TOT ADJ PTS	EFF. BASE RATE	REPL. COST NEW	AYB	EYB	ECON	FNCT		NORM	% COND
0500	01	2,136	126.2240	189.34	404,430	1984	2007	0	0	0	7.75	92.25

1 SFR CUST – 0% - 0 Heated Area: 1250 HX Base Yr

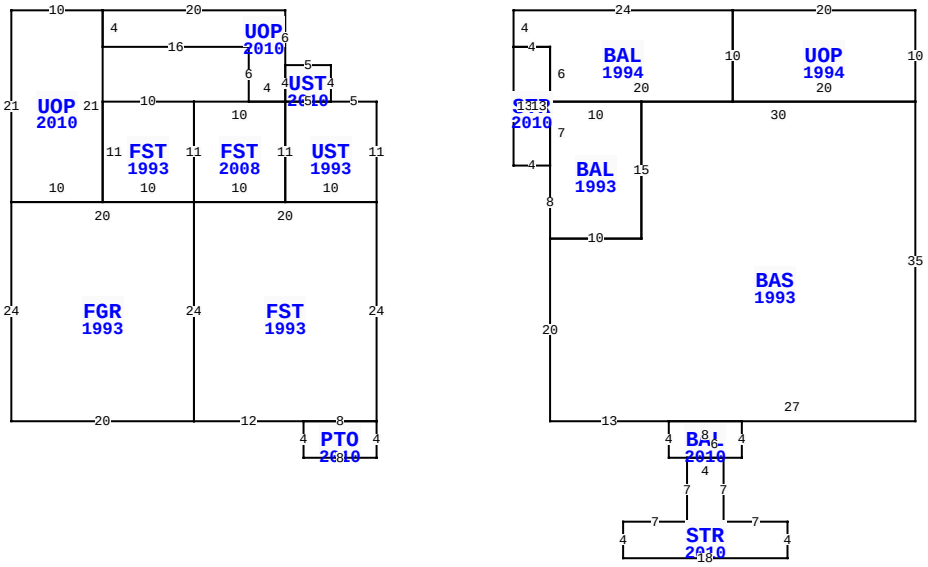

** This building has 16 Sub-Areas

1546 LISA AVE, FERNANDINA BEACH

BLD DATE		LGL DATE	
XF DATE		LAND DATE	
INC DATE		AG DATE	

NASSAU COUNTY PROPERTY

PAGE 1 of 1 2

VALUATION SUMMARY

VALUATION BY	STANDARD
Tax Group: 2	Tax Dist:
BUILDING MARKET VALUE	373,087
TOTAL MARKET OB/XF VALUE	4,266
TOTAL LAND VALUE - MARKET	400,000
TOTAL MARKET VALUE	777,353
SOH/AGL Deduction	151,734
ASSESSED VALUE	625,619
TOTAL EXEMPTION VALUE	0
BASE TAXABLE VALUE	625,619
TOTAL JUST VALUE	777,353
NCON VALUE	0
INCOME VALUE	
PREVIOUS YEAR MKT VALUE	760,787

PERMIT NUM	DESCRIPTION	AMT	ISSUED
20120390	130LF FENCE	1,000	03/12/2012
20100314	STAIRS & DECK	3,000	02/19/2010
20051196	REPAIR/RRF	3,000	02/09/2005
97-10521	XFOB	500	06/04/1997
8373	ADDITION	3,200	06/09/1994

SALES DATA

OFF RECORD Number	DATE	TYPE INST	Q U	V I	RSN CD	SALE PRICE
2064/1968	8/09/2016	WD	Q	I	01	425,000
GRANTOR: WEIGEL TAMMY						
GRANTEE: CLEVELAND ROBERT A						
1101/1027	12/17/2002	WD	Q	I		238,800
GRANTOR: PURIFOY OTTIS & JUDIT						
GRANTEE: WEIGEL TAMMY						

BUILDING NOTES

BUILDING DIMENSIONS

UST=[YR=1993] W5 UST=[YR=2010] N4W5 UOP=[YR=2010] N6W20 UOP=[YR=2010] W10S21 FGR=[YR=1993] S24E20 FST=[YR=1993] E12 PTO=[YR=2010] S4E8N4W8$ E8N24 W20S24 $ N24W20$ E10N21$ S4E16S6E4 N4 $ S4E5$W5 FST=[YR=2008] W10 FST=[YR=1993] W10S11E10N11$ S11E10N11$S11E10 N11$ PTR=E15N10 BAL=[YR=1994] S4 STR=[YR=2010] S13E4 BAL=[YR=1993] S8 BAS=[YR=1993] S20E13 BAL=[YR=2010] S4E2 STR=[YR=2010] S7 W7S4E18N4W7N7W4$ E6 N4W8$ E27N35 UOP=[YR=1994] N10W20S10 E20$ W30S15W10$ E10N15W10S7$ N13W4$ E4S6E20 N10W24$ S10W15$.

EXTRA FEATURES

LN	OB/XF CODE	DESCRIPTION	BLD	CAP	L	W	UNITS	UT	Adj R	ADJ UNIT PRICE	ORIG COND	YEAR ON	YEAR ACTUAL	Q	% COND	OB/XF MKT VALUE	NOTES
1	0810	CONCRETE A	0	0	27	12	324.00	SF	6.50	6.50	100	1984	1984	3	44	927	
2	0500	FP-PRE FAB	0	0	0	0	1.00	UT	3,500.00	3,500.00	100	1984	1984	3	56	1,960	
3	0810	CONCRETE A	0	0	26	12	312.00	SF	6.50	6.50	100	1994	1994	3	68	1,379	

LAND DESCRIPTION

TOTAL OB/XF 4,266

LN	USE CODE	CLS	LAND USE DESCRIPTION	CAP	RD	LOC ZONE	FRONT	DEPTH	TOT LND UTS	UNIT TYPE	DT	DPTH FACT	% COND	TOT ADJ	UNIT PRICE	ADJ UNIT PRICE	LAND VALUE	OTHER ADJUSTMENTS AND NOTES	YEAR	DENSITY	DECL	FRZ	YR	CONSRV
1	000100	C	SFR	0	0006	R-1	61.00	85.00	1.00	LT		1.00	1.00	1.00	400,000.00	400,000.00	400,000							

REVIEW DATE 01/14/2021 BY TWA Total Acres: 0.00 Total Land Value: 400,000 Market: 0 Agricultural: 0 Common: 400,000 PRINTED 08/06/2024 BY SYS