LOT 6
IN OR 2536/1775
COASTAL COTTAGES PBK 8/161

MILLER DEBORAH
1415 COASTAL OAKS DR
FERNANDINA BEACH, FL 32034

2024

00-00-31-1612-0006-0000

NASSAU COUNTY PROPERTY

BUILDING CHARACTERISTICS

ELEMENT	CD	CONSTRUCTION
Exterior Wall	10	ABOVE AVG 100
Roof Structur	08	IRREGULAR 100
Roof Cover	03	COMP SHNGL 100
Interior Wall	05	DRYWALL 100
Interior Floo	11	CLAY TILE 50
Interior Floo	14	CARPET 50
Air Condition	03	CENTRAL 100
Heating Type	04	AIR DUCTED 100
Bedrooms		3 100
Bathrooms		2.5 100
Frame	02	WOOD FRAME 100
Stories	1.5	1.5 100
Units		0 100
Quality	06	Quality Level 06
DOR CODE	0100	SINGLE FAMILY
MAP NUM		MKT AREA 01
NEIGHBORHOOD/LOC	1211.00	

AREA TYPE	TOTAL GROSS AREA	PCT OF BASE	TOT ADJ AREA	SUBAREA MARKET VALUE
BAS	1,242	100	1,242	188,376
FGR	529	55	291	44,136
FOP	77	30	23	3,489
FOP	110	30	33	5,005
FUS	594	100	594	90,093
STR	36	10	4	606
TOTALS	2,588		2,187	331,705

MARKET ADJUSTMENTS

TYPE	MDL	EFF. AREA	TOT ADJ PTS	EFF. BASE RATE	REPL. COST NEW	AYB	EYB	ECON	FNCT		NORM	% COND
0320	11	2,187	163.7433	155.56	340,210	2017	2017	0	0	0	2.50	97.50

1 TOWNHOUSE - 100% - 2023 Heated Area: 1836 HX Base Yr 2023

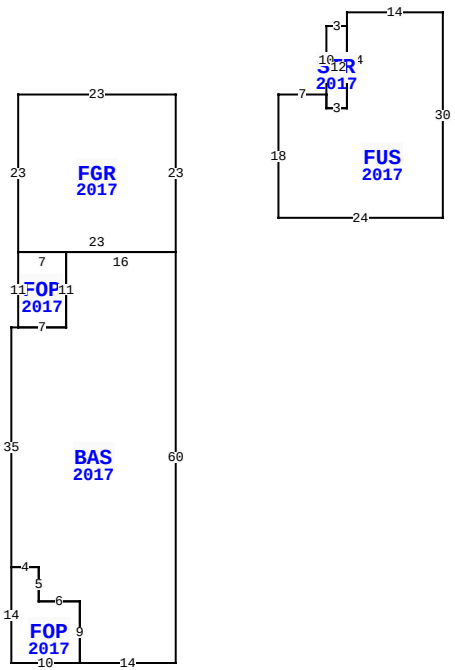

1415 COASTAL OAKS DR, FERNANDINA BEACH

BLD DATE		LGL DATE	
XF DATE		LAND DATE	05/16/2024 MLU
INC DATE		AG DATE	

VALUATION SUMMARY

VALUATION BY		STANDARD
Tax Group: 2	Tax Dist:	
BUILDING MARKET VALUE		331,705
TOTAL MARKET OB/XF VALUE		3,837
TOTAL LAND VALUE - MARKET		120,000
TOTAL MARKET VALUE		455,542
SOH/AGL Deduction		5,182
ASSESSED VALUE		450,360
TOTAL EXEMPTION VALUE	HX HB	50,000
BASE TAXABLE VALUE		400,360
TOTAL JUST VALUE		455,542
NCON VALUE		0
INCOME VALUE		
PREVIOUS YEAR MKT VALUE		437,243

PERMIT NUM	DESCRIPTION	AMT	ISSUED
20163008	CO ISSUED	0	04/24/2017
20163008	NEW CONSTR	238,621	11/02/2016

SALES DATA

OFF RECORD Number	DATE	TYPE INST	Q U	V I	RSN CD	SALE PRICE
2536/1775	2/07/2022	WD	Q	I	01	500,000
GRANTOR: JOHNSON MARK A & PAME						
GRANTEE: MILLER DEBORAH						
2250/1358	1/24/2019	WD	Q	I	02	325,000
GRANTOR: RAINEY TANYA MARIE						
GRANTEE: JOHNSON MARK A & PA						

BUILDING NOTES

BUILDING DIMENSIONS

FGR=[YR=2017] W23 S23 FOP=[YR=2017] S11 BAS=[YR=2017] W1 S35 FOP=[YR=2017] S14 E10 N9 W6 N5 W4$ E4 S5 E6 S9 E14 N60 W16 S11 W7$ E7 N11 W7$ E23 N23$ PTR=E15 FUS=[YR=2017] E7 STR=[YR=2017] N10 E3 S12 W3 N2$ S2 E3 N14 E14 S30 W24 N18$ W15$.

EXTRA FEATURES

LN	OB/XF CODE	DESCRIPTION	BLD	CAP	L	W	UNITS	UT	Adj R	ADJ UNIT PRICE	ORIG COND	YEAR ON	YEAR ACTUAL	Q	% COND	OB/XF MKT VALUE	NOTES
1	0855	CONC PAVER	0	100	0	0	44.00	SF	7.00	7.00	100	2017	2017	3	97	299	
2	0855	CONC PAVER	0	100	4	4	16.00	SF	7.00	7.00	100	2017	2017	3	97	109	
3	0855	CONC PAVER	0	100	0	0	144.00	SF	7.00	7.00	100	2017	2017	3	97	978	
4	0855	CONC PAVER	0	100	0	0	361.00	SF	7.00	7.00	100	2017	2017	3	97	2,451	

LAND DESCRIPTION

TOTAL OB/XF 3,837

LN	USE CODE	CLS	LAND USE DESCRIPTION	CAP	RD	LOC ZONE	FRONT	DEPTH	TOT LND UTS	UNIT TYPE	DT	DPTH FACT	% COND	TOT ADJ	UNIT PRICE	ADJ UNIT PRICE	LAND VALUE	OTHER ADJUSTMENTS AND NOTES	YEAR	DENSITY	DECL	FRZ	YR	CONSRV
1	000100	C	SFR	100		MU-1	0.00	0.00	1.00	LT		1.00	1.00	1.00	120,000.00	120,000.00	120,000							

REVIEW DATE 01/14/2021 BY TWA Total Acres: 0.00 Total Land Value: 120,000 Market: 0 Agricultural: 0 Common: 120,000 PRINTED 08/06/2024 BY SYS