LOT 46
COASTAL OAKS PBK 8/109

STARKS CHRISTOPHER WAYNE &/DELZER MICHAEL
1550 COASTAL OAKS CIR N
FERNANDINA BEACH, FL 32034

2024

00-00-31-1611-0046-0000

BUILDING CHARACTERISTICS

ELEMENT	CD	CONSTRUCTION
Exterior Wall	10	ABOVE AVG 100
Roof Structur	03	GABLE/HIP 100
Roof Cover	03	COMP SHNGL 100
Interior Wall	05	DRYWALL 100
Interior Floo	12	HARDWOOD 70
Interior Floo	14	CARPET 30
Air Condition	03	CENTRAL 100
Heating Type	04	AIR DUCTED 100
Bedrooms		3 100
Bathrooms		2 100
Frame	02	WOOD FRAME 100
Stories	1.	1. 100
Units		0 100
Occupancy	00	NONE 100
Quality	06	Quality Level 06
DOR CODE	0100	SINGLE FAMILY
MAP NUM		MKT AREA 01
NEIGHBORHOOD/LOC	1210.00	

AREA TYPE	TOTAL GROSS AREA	PCT OF BASE	TOT ADJ AREA	SUBAREA MARKET VALUE
BAS	1,977	100	1,977	368,919
FGR	496	55	273	50,943
FOP	180	30	54	10,076
FOP	187	30	56	10,449
TOTALS	2,840		2,360	440,388

MARKET ADJUSTMENTS

TYPE	MDL	EFF. AREA	TOT ADJ PTS	EFF. BASE RATE	REPL. COST NEW	AYB	EYB	ECON	FNCT		NORM	% COND
0500	01	2,360	125.6605	188.49	444,836	2020	2020	0	0	0	1.00	99.00

1 SFR CUST – 100% - 2023 Heated Area: 1977 HX Base Yr 2023

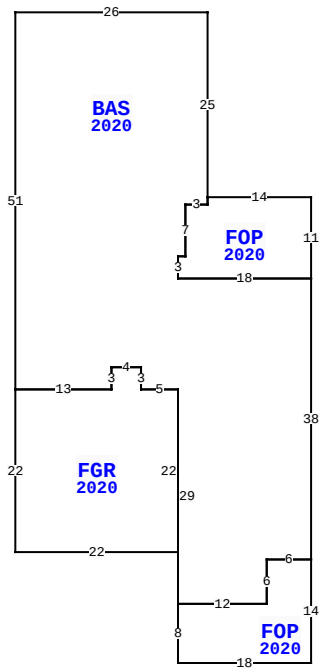

1550 N COASTAL OAKS CIR, FERNANDINA BEACH

BLD DATE		LGL DATE	
XF DATE		LAND DATE	03/20/2024 MLU
INC DATE		AG DATE	

NASSAU COUNTY PROPERTY

PAGE 1 of 1 2

VALUATION SUMMARY

VALUATION BY		STANDARD
Tax Group: 2	Tax Dist:	
BUILDING MARKET VALUE		440,388
TOTAL MARKET OB/XF VALUE		4,103
TOTAL LAND VALUE - MARKET		200,000
TOTAL MARKET VALUE		644,491
SOH/AGL Deduction		16,608
ASSESSED VALUE		627,883
TOTAL EXEMPTION VALUE	HX HB	50,000
BASE TAXABLE VALUE		577,883
TOTAL JUST VALUE		644,491
NCON VALUE		0
INCOME VALUE		
PREVIOUS YEAR MKT VALUE		609,595

PERMIT NUM	DESCRIPTION	AMT	ISSUED
20190514	NEW CONSTR	0	09/06/2019

SALES DATA

OFF RECORD Number	DATE	TYPE INST	Q U	V I	RSN CD	SALE PRICE
2559/0128	4/28/2022	WD	U	I	16	921,000
GRANTOR: WINTERBOTTOM ALAN TRU						
GRANTEE: STARKS CHRISTOPHER						
2559/0126	4/28/2022	WD	U	I	16	921,000
GRANTOR: TERRY JANICE E TRUST						
GRANTEE: STARKS CHRISTOPHER						

BUILDING NOTES

BUILDING DIMENSIONS

FOP=[YR=2020] W14 BAS=[YR=2020] N25 W26 S51 FGR=[YR=2020] S22 E22 N22 W5 N3 W4 S3 W13 $ E13 N3 E4 S3 E5 S29 FOP=[YR=2020] S8 E18 N14 W6 S6 W12 $ E12 N6 E6 N38 W18 N3 E1 N7 E3 N1$ S1 W3 S7 W1 S3 E18 N11 $.

EXTRA FEATURES

LN	OB/XF CODE	DESCRIPTION	BLD	CAP	L	W	UNITS	UT	Adj R	ADJ UNIT PRICE	ORIG COND	YEAR ON	YEAR ACTUAL	Q	% COND	OB/XF MKT VALUE	NOTES
1	0811	CONCRETE B	0	100	0	0	797.00	SF	5.20	5.20	100	2020	2020	3	99	4,103	

LAND DESCRIPTION

TOTAL OB/XF 4,103

LN	USE CODE	CLS	LAND USE DESCRIPTION	CAP	RD	LOC ZONE	FRONT	DEPTH	TOT LND UTS	UNIT TYPE	DT	DPTH FACT	% COND	TOT ADJ	UNIT PRICE	ADJ UNIT PRICE	LAND VALUE	OTHER ADJUSTMENTS AND NOTES	YEAR	DENSITY	DECL	FRZ	YR	CONSRV
1	000100	C	SFR	100		R-2	0.00	0.00	1.00	LT		1.00	1.00	1.00	200,000.00	200,000.00	200,000							

REVIEW DATE 10/07/2020 BY RK Total Acres: 0.00 Total Land Value: 200,000 Market: 0 Agricultural: 0 Common: 200,000 PRINTED 08/06/2024 BY SYS