LOT 30
COASTAL OAKS PBK 8/109

CICHOWSKI LORRAINE HELENA
1565 W COASTAL OAKS CIR
FERNANDINA BEACH, FL 32034

2024

00-00-31-1611-0030-0000

BUILDING CHARACTERISTICS

ELEMENT	CD	CONSTRUCTION
Exterior Wall	31	HARDIE BRD 100
Roof Structur	03	GABLE/HIP 100
Roof Cover	03	COMP SHNGL 100
Interior Wall	05	DRYWALL 100
Interior Floo	11	CLAY TILE 100
Interior KITCH	SELECT NEW	N/A 0
Air Condition	03	CENTRAL 100
Heating Type	04	AIR DUCTED 100
Bedrooms		3 100
Bathrooms		3 100
Frame	02	WOOD FRAME 100
Stories	1.	1. 100
Units		0 100
Quality	06	Quality Level 06
DOR CODE	0100	SINGLE FAMILY
MAP NUM		MKT AREA 01
NEIGHBORHOOD/LOC	1210.00	

AREA TYPE	TOTAL GROSS AREA	PCT OF BASE	TOT ADJ AREA	SUBAREA MARKET VALUE
BAS	2,075	100	2,075	426,081
FGR	504	55	277	56,879
FOP	182	30	55	11,294
FOP	198	30	59	12,115
STR	12	10	1	205
USP	143	30	43	8,830
TOTALS	3,114		2,510	515,403

MARKET ADJUSTMENTS

TYPE	MDL	EFF. AREA	TOT ADJ PTS	EFF. BASE RATE	REPL. COST NEW	AYB	EYB	ECON	FNCT		NORM	% COND
0500	01	2,510	136.8960	205.34	515,403	2023	2023	0	0	0	0.00	100.00

1 SFR CUST – 100% - 2024 Heated Area: 2075 HX Base Yr 2024

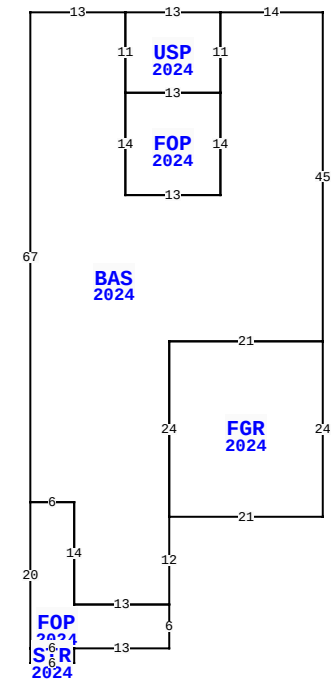

1565 W COASTAL OAKS CIR, FERNANDINA BEACH

BLD DATE		LGL DATE	
XF DATE		LAND DATE	03/20/2024 MLU
INC DATE		AG DATE	

NASSAU COUNTY PROPERTY

PAGE 1 of 1 2

VALUATION SUMMARY

VALUATION BY		STANDARD
Tax Group: 2	Tax Dist:	
BUILDING MARKET VALUE		515,403
TOTAL MARKET OB/XF VALUE		14,470
TOTAL LAND VALUE - MARKET		200,000
TOTAL MARKET VALUE		729,873
SOH/AGL Deduction		11,707
ASSESSED VALUE		718,166
TOTAL EXEMPTION VALUE	HX HB	50,000
BASE TAXABLE VALUE		668,166
TOTAL JUST VALUE		729,873
NCON VALUE		529,873
INCOME VALUE		
PREVIOUS YEAR MKT VALUE		185,000

PERMIT NUM	DESCRIPTION	AMT	ISSUED
20222148			03/14/2023
20222148	NEW CONSTR	0	06/01/2022
20183511	NEW CONSTR	372,420	10/11/2018

SALES DATA

OFF RECORD Number	DATE	TYPE INST	Q / U	V / I	RSN CD	SALE PRICE
2529/1798	1/13/2022	WD	Q	V	02	219,900
GRANTOR: GERRITY JOSEPH & CARR						
GRANTEE: CICHOWSKI LORRAINE						
2446/1175	3/25/2021	WD	Q	V	02	140,000
GRANTOR: TUPPER MATTHEW R & GE						
GRANTEE: GERRITY JOSEPH & CA						

BUILDING NOTES

EXTRA FEATURES

LN	OB/XF CODE	DESCRIPTION	BLD	CAP	L	W	UNITS	UT	Adj R	ADJ UNIT PRICE	ORIG COND	YEAR ON	YEAR ACTUAL	Q	% COND	OB/XF MKT VALUE	NOTES
1	0504	FP-ELECTRI	0	100	0	0	1.00	UT	2,000.00	2,000.00	100	2024	2023		100	2,000	
2	0855	CONC PAVER	0	100	0	0	1,247.00	SF	10.00	10.00	100	2024	2023		100	12,470	

BUILDING DIMENSIONS

BAS=[YR=2024;ORIG=90,10] W14 S11 S14 W13 N14 N11 W13 S67 E6 S14 E13 N12 N24 E21 N45 $
FOP=[YR=2024;ORIG=63,21] E13 S14 W13 N14 $
USP=[YR=2024;ORIG=63,10] E13 S11 W13 N11 $
FGR=[YR=2024;ORIG=90,55] W21 S24 E21 N24 $
FOP=[YR=2024;ORIG=50,77] E6 S14 E13 S6 W13 W6 N20 $
STR=[YR=2024;ORIG=50,97] E6 S2 W6 N2 $
.

LAND DESCRIPTION

TOTAL OB/XF 14,470

LN	USE CODE	CLS	LAND USE DESCRIPTION	CAP	RD	LOC ZONE	FRONT	DEPTH	TOT LND UTS	UNIT TYPE	DT	DPTH FACT	% COND	TOT ADJ	UNIT PRICE	ADJ UNIT PRICE	LAND VALUE	OTHER ADJUSTMENTS AND NOTES	YEAR	DENSITY	DECL	FRZ	YR	CONSRV
1	000100	C	SFR	100		R-2	0.00	0.00	1.00	LT		1.00	1.00	1.00	200,000.00	200,000.00	200,000							

REVIEW DATE 01/30/2024 BY DJ Total Acres: 0.00 Total Land Value: 200,000 Market: 0 Agricultural: 0 Common: 200,000 PRINTED 08/06/2024 BY SYS