OUT LOT E 183 FT OF W 203
FT OF N 1511/2 FT OF S
181.5 FT OF OUT LOT 230

CHURCH MEMORIAL METHODIST
C/O BOARD OF TRUSTEES, 601 CENTRE AVE
FERNANDINA BEACH, FL 32034

2024

00-00-31-1600-0230-0050

NASSAU COUNTY PROPERTY

BUILDING CHARACTERISTICS

ELEMENT	CD	CONSTRUCTION
Exterior Wall	18	CEMENT BRK 90
Exterior Wall	10	ABOVE AVG 10
Roof Structur	03	GABLE/HIP 100
Roof Cover	03	COMP SHNGL 100
Interior Wall	05	DRYWALL 100
Interior Floo	12	HARDWOOD 70
Interior Floo	11	CLAY TILE 30
Air Condition	03	CENTRAL 100
Heating Type	04	AIR DUCTED 100
Bedrooms		3 100
Bathrooms		2 100
Frame	02	WOOD FRAME 100
Stories	1.	1. 100
Units		0 100
BUD8 Adjustme	02	DIST FB 100
Occupancy	00	NONE 100
Quality	03	Quality Level 03
DOR CODE	7100	CHURCHES
MAP NUM		MKT AREA 01
NEIGHBORHOOD/LOC	1008.00	

AREA TYPE	TOTAL GROSS AREA	PCT OF BASE	TOT ADJ AREA	SUBAREA MARKET VALUE
BAS	2,108	100	2,108	154,757
BAS	116	100	116	8,516
BAS	170	100	170	12,480
BAS	174	100	174	12,774
FGR	490	55	270	19,822
FOP	87	30	26	1,909
FSP	190	40	76	5,580
STP	12	10	1	73
STP	16	10	2	147
STP	22	10	2	147
TOTALS	3,385		2,945	216,205

MARKET ADJUSTMENTS

TYPE	MDL	EFF. AREA	TOT ADJ PTS	EFF. BASE RATE	REPL. COST NEW	AYB	EYB	ECON	FNCT		NORM	% COND
0100	01	2,945	111.6720	106.09	312,435	1957	1980	0	0	0	30.80	69.20

1 SINGLE FAM – 0% - 0 Heated Area: 2568 HX Base Yr

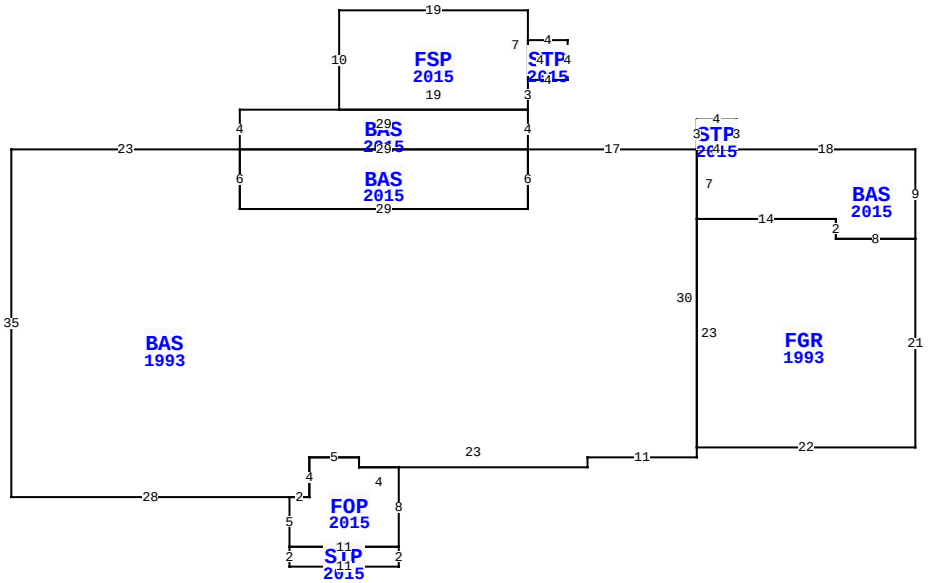

18 S 18TH ST, FERNANDINA BEACH

BLD DATE	06/16/2016 KK	LGL DATE	
XF DATE		LAND DATE	03/25/2024 MLU
INC DATE		AG DATE	

VALUATION SUMMARY

VALUATION BY		STANDARD
Tax Group: 2	Tax Dist:	
BUILDING MARKET VALUE		216,205
TOTAL MARKET OB/XF VALUE		4,610
TOTAL LAND VALUE - MARKET		507,360
TOTAL MARKET VALUE		728,175
SOH/AGL Deduction		261,774
ASSESSED VALUE		466,401
TOTAL EXEMPTION VALUE	02	466,401
BASE TAXABLE VALUE		0
TOTAL JUST VALUE		728,175
NCON VALUE		0
INCOME VALUE		
PREVIOUS YEAR MKT VALUE		646,984

PERMIT NUM	DESCRIPTION	AMT	ISSUED
20151236	ADDITION & REMODE	908	06/04/2015
20150776	ADDITION & REMODE	3,500	04/10/2015
20150119	ADDITION	75,000	01/21/2015
20080785	REPAIR/RRF	9,000	05/09/2008
20041319	REMODEL	1,000	07/19/2004
20032513	REPAIR/RRF	2,000	02/18/2003

SALES DATA

OFF RECORD Number	DATE	TYPE INST	Q / U	V / I	RSN CD	SALE PRICE

BUILDING NOTES

BUILDING DIMENSIONS

BAS=[YR=1993] W17 BAS=[YR=2015] N4 FSP=[YR=2015] N3 STP=[YR=2015] E4 N4 W4 S4$ N7 W19 S10 E19$ W29 S4 E29 $ BAS=[YR=2015] W29 S6 E29 N6$ S6 W29 N6 W23 S35 E28 FOP=[YR=2015] S5 STP=[YR=2015] S2 E11 N2 W11$ E11 N8 W4 N1 W5 S4 W2$ E2 N4 E5 S1 E23 N1 E11 N1 FGR=[YR=1993] E22 N21 BAS=[YR=2015] N9 W18 STP=[YR=2015] N3 W4 S3 E4$ W4 S7 E14 S2 E8$ W8 N2 W14 S23$ N30$.

EXTRA FEATURES

LN	OB/XF CODE	DESCRIPTION	BLD	CAP	L	W	UNITS	UT	Adj R	ADJ UNIT PRICE	ORIG COND	YEAR ON	YEAR ACTUAL	Q	% COND	OB/XF MKT VALUE	NOTES
1	0811	CONCRETE B	0	0	0	0	772.00	SF	5.20	5.20	100	1957	1957	3	20	803	
2	0500	FP-PRE FAB	0	0	0	0	1.00	UT	3,500.00	3,500.00	100	1957	1957	3	20	700	
3	0811	CONCRETE B	0	0	0	0	629.00	SF	5.20	5.20	100	2015	2015	3	95	3,107	

LAND DESCRIPTION

TOTAL OB/XF 4,610

LN	USE CODE	CLS	LAND USE DESCRIPTION	CAP	RD	LOC ZONE	FRONT	DEPTH	TOT LND UTS	UNIT TYPE	DT	DPTH FACT	% COND	TOT ADJ	UNIT PRICE	ADJ UNIT PRICE	LAND VALUE	OTHER ADJUSTMENTS AND NOTES	YEAR	DENSITY	DECL	FRZ	YR	CONSRV
1	000100	C	SFR	0	0006	R-1	151.00	183.00	151.00	FF	1	1.20	1.00	1.20	2,800.00	3,360.00	507,360							

REVIEW DATE 08/01/2022 BY HSA Total Acres: 0.00 Total Land Value: 507,360 Market: 0 Agricultural: 0 Common: 507,360 PRINTED 08/06/2024 BY SYS