N194 FT OF W68 FT OF E166 1/2
FT OF OUT LOT 228
IN OR 2722/1119

HAMPTON JARRAD STEPHEN
1807 BEECH STREET
FERNANDINA BEACH, FL 32034

2024

00-00-31-1600-0228-0030

NASSAU COUNTY PROPERTY

BUILDING CHARACTERISTICS

ELEMENT	CD	CONSTRUCTION
Exterior Wall	05	AVERAGE 100
Roof Structur	03	GABLE/HIP 100
Roof Cover	03	COMP SHNGL 100
Interior Wall	05	DRYWALL 100
Interior Floo	12	HARDWOOD 100
Air Condition	03	CENTRAL 100
Heating Type	04	AIR DUCTED 100
Bedrooms		3 100
Bathrooms		1 100
Frame	02	WOOD FRAME 100
Stories	1.	1. 100
Units		0 100
BUD8 Adjustme	02	DIST FB 100
Occupancy	00	NONE 100
Quality	03	Quality Level 03

DOR CODE 0100 SINGLE FAMILY
MAP NUM | MKT AREA 01
NEIGHBORHOOD/LOC 1008.00

AREA TYPE	TOTAL GROSS AREA	PCT OF BASE	TOT ADJ AREA	SUBAREA MARKET VALUE
BAS	1,436	100	1,436	115,746
BAS	375	100	375	30,226
DCK	87	10	9	725
DCK	132	10	13	1,048
DCK	300	10	30	2,418
TOTALS	2,330		1,863	150,163

MARKET ADJUSTMENTS

TYPE	MDL	EFF. AREA	TOT ADJ PTS	EFF. BASE RATE	REPL. COST NEW	AYB	EYB	ECON	FNCT		NORM	% COND
0100	01	1,863	101.9200	96.82	180,376	1951	1985	0	0	0	16.75	83.25

1 SINGLE FAM – 0% - 2024 Heated Area: 1811 HX Base Yr

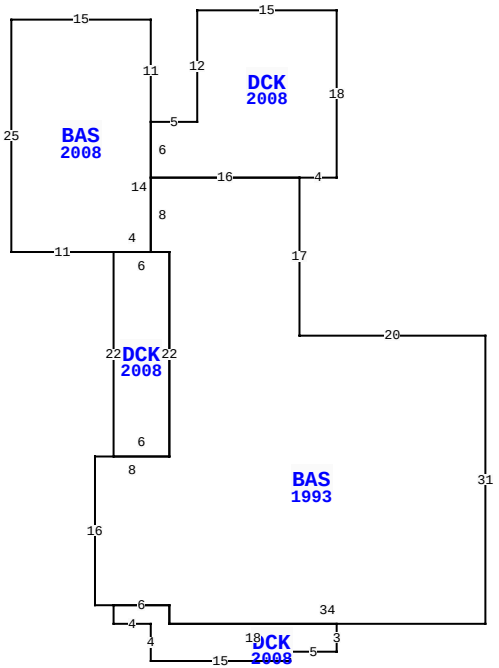

1807 BEECH ST, FERNANDINA BEACH

BLD DATE		LGL DATE	
XF DATE		LAND DATE	03/25/2024 MLU
INC DATE		AG DATE	

NASSAU COUNTY PROPERTY — VALUATION SUMMARY

VALUATION BY	STANDARD
Tax Group: 2	Tax Dist:
BUILDING MARKET VALUE	150,163
TOTAL MARKET OB/XF VALUE	4,771
TOTAL LAND VALUE - MARKET	190,400
TOTAL MARKET VALUE	345,334
SOH/AGL Deduction	0
ASSESSED VALUE	345,334
TOTAL EXEMPTION VALUE	0
BASE TAXABLE VALUE	345,334
TOTAL JUST VALUE	345,334
NCON VALUE	0
INCOME VALUE	
PREVIOUS YEAR MKT VALUE	311,254

PERMIT NUM	DESCRIPTION	AMT	ISSUED
2023-0697	INT REMODEL	120,000	02/08/2024
20062121	DEMOLITION	0	09/15/2006
20033785	REPAIR/RRF	12,000	09/05/2003

SALES DATA

OFF RECORD Number	DATE	TYPE INST	Q / U	V / I	RSN CD	SALE PRICE
2722/1119	7/01/2024	WD	Q	I	01	710,000
GRANTOR: MY FLORIDA HOME SOLUT						
GRANTEE: HAMPTON JARRAD STEP						
2667/993	9/15/2023	WD	Q	I	01	405,000
GRANTOR: CITYGATE HOMES LLC						
GRANTEE: MY FLORIDA HOME SOL						

BUILDING NOTES

BUILDING DIMENSIONS

BAS=[YR=1993] W20 N17 DCK=[YR=2008] E4 N18 W15 S12 W5
BAS=[YR=2008] N11 W15 S25 E11 DCK=[YR=2008] S22 E6 N22 W6$ E4 N14$ S6 E16$ W16 S8 E2 S22 W8 S16 E2 DCK=[YR=2008] S2 E4 S4 E15 N1 E5 N3 W18 N2 W6$ E6 S2 E34 N31 $.

EXTRA FEATURES

LN	OB/XF CODE	DESCRIPTION	BLD	CAP	L	W	UNITS	UT	Adj R	ADJ UNIT PRICE	ORIG COND	YEAR ON	YEAR ACTUAL	Q	% COND	OB/XF MKT VALUE	NOTES
1	0500	FP-PRE FAB	0	0	0	0	1.00	UT	3,500.00	3,500.00	100	1980	1980	3	46.5	1,628	
2	0811	CONCRETE B	0	0	0	0	853.00	SF	5.20	5.20	100	1990	1990	3	59.5	2,639	
3	0351	CARPORT MT	0	0	12	21	252.00	SF	10.00	10.00	100	1990	1990	3	20	504	

LAND DESCRIPTION

TOTAL OB/XF 4,771

LN	USE CODE	CLS	LAND USE DESCRIPTION	CAP	RD	LOC ZONE	FRONT	DEPTH	TOT LND UTS	UNIT TYPE	DT	DPTH FACT	% COND	TOT ADJ	UNIT PRICE	ADJ UNIT PRICE	LAND VALUE	OTHER ADJUSTMENTS AND NOTES	YEAR	DENSITY	DECL	FRZ	YR	CONSRV
1	000100	C	SFR	0	0006	R-1	68.00	194.00	68.00	FF		1.00	1.00	1.00	2,800.00	2,800.00	190,400							

REVIEW DATE 05/01/2024 BY DJ Total Acres: 0.00 Total Land Value: 190,400 Market: 0 Agricultural: 0 Common: 190,400 PRINTED 08/06/2024 BY SYS