N 110 FT OF S 140 FT OF W
136 1/2FT OF E 166 1/2FT OF
OUT LOT 187 IN OR 2224/856

ROBERTS TIMOTHY W & AMY N
21 S 18TH ST
FERNANDINA BEACH, FL 32034

2024

00-00-31-1600-0187-0020

NASSAU COUNTY PROPERTY

BUILDING CHARACTERISTICS

ELEMENT	CD	CONSTRUCTION
Exterior Wall	20	FACE BRICK 80
Exterior Wall	05	AVERAGE 20
Roof Structur	03	GABLE/HIP 100
Roof Cover	03	COMP SHNGL 100
Interior Wall	03	PLASTER 100
Interior Floo	13	LVT/LAMNT 50
Interior Floo	14	CARPET 50
Air Condition	03	CENTRAL 100
Heating Type	04	AIR DUCTED 100
Bedrooms		3 100
Bathrooms		2 100
Frame	02	WOOD FRAME 100
Stories	1.	1. 100
Units		0 100
BUD8 Adjustme	02	DIST FB 100
Occupancy	00	NONE 100
Quality	04	Quality Level 04
DOR CODE	0100	SINGLE FAMILY
MAP NUM		MKT AREA 01
NEIGHBORHOOD/LOC	1008.00	

AREA TYPE	TOTAL GROSS AREA	PCT OF BASE	TOT ADJ AREA	SUBAREA MARKET VALUE
BAS	2,060	100	2,060	226,937
FCP	380	25	95	10,466
FOP	30	30	9	991
FOP	180	30	54	5,949
PTO	216	5	11	1,212
STP	16	10	2	220
UDU	81	55	45	4,957
TOTALS	2,963		2,276	250,732

MARKET ADJUSTMENTS

TYPE	MDL	EFF. AREA	TOT ADJ PTS	EFF. BASE RATE	REPL. COST NEW	AYB	EYB	ECON	FNCT		NORM	% COND
0900	01	2,276	113.6016	142.00	323,192	1961	1990	0	0	0	22.42	77.58

1 SNGL FAM – 100% - 2019 Heated Area: 2060 HX Base Yr 2019

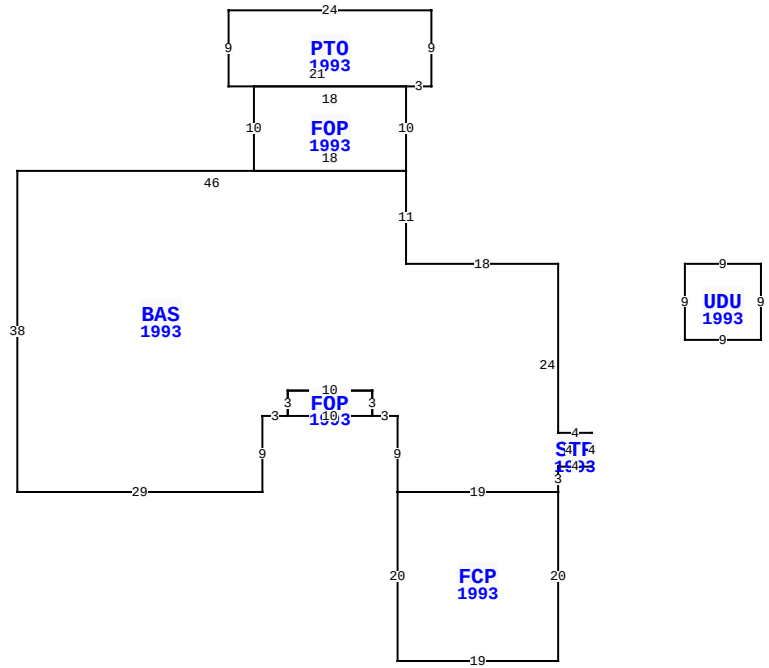

21 S 18TH ST, FERNANDINA BEACH

BLD DATE		LGL DATE	
XF DATE		LAND DATE	03/25/2024 MLU
INC DATE		AG DATE	

VALUATION SUMMARY

VALUATION BY		STANDARD
Tax Group: 2	Tax Dist:	
BUILDING MARKET VALUE		250,732
TOTAL MARKET OB/XF VALUE		46,846
TOTAL LAND VALUE - MARKET		341,880
TOTAL MARKET VALUE		639,458
SOH/AGL Deduction		338,654
ASSESSED VALUE		300,804
TOTAL EXEMPTION VALUE	HX HB	50,000
BASE TAXABLE VALUE		250,804
TOTAL JUST VALUE		639,458
NCON VALUE		0
INCOME VALUE		
PREVIOUS YEAR MKT VALUE		580,824

PERMIT NUM	DESCRIPTION	AMT	ISSUED
20190137	SWIM POOL	0	04/16/2019
20042184	REPAIR/RRF	2,000	11/19/2004
B959261	REPAIR/RRF	4,700	08/23/1995

SALES DATA

OFF RECORD Number	DATE	TYPE INST	Q U	V I	RSN CD	SALE PRICE
2224/0856	9/18/2018	WD	Q	I	02	310,300
GRANTOR: KNOWLES JUDY E ET AL						
GRANTEE: ROBERTS TIMOTHY W &						
0870/1472	3/05/1999	WD	U	I	06	100
GRANTOR: ADKINS WILLIE						
GRANTEE: KNOWLES JUDY & DEBR						

BUILDING NOTES

BUILDING DIMENSIONS

BAS=[YR=1993] W18 N11 FOP=[YR=1993] N10 PTO=[YR=1993] E3 N9 W24 S9 E21 $ W18 S10 E18 $ W46 S38 E29 N9 E3 FOP=[YR=1993] E10 N3 W10 S3$ N3 E10 S3 E3 S9 FCP=[YR=1993] S20 E19 N20 W19 $ E19 N3 STP=[YR=1993] E4 N4 W4 S4 $ N24 $PTR= E15 UDU=[YR=1993] E9 S9 W9 N9 $W15 $.

EXTRA FEATURES

LN	OB/XF CODE	DESCRIPTION	BLD	CAP	L	W	UNITS	UT	Adj R	ADJ UNIT PRICE	ORIG COND	YEAR ON	YEAR ACTUAL	Q	% COND	OB/XF MKT VALUE	NOTES
1	0810	CONCRETE A	0	100	0	0	1,695.00	SF	6.50	6.50	100	1961	1961	3	20	2,204	
2	0861	POOL GUNIT	0	100	0	0	442.00	SF	85.00	85.00	100	2019	2019	3	90	33,813	
3	0855	CONC PAVER	0	100	0	0	1,105.00	SF	10.00	10.00	100	2019	2019	3	98	10,829	

LAND DESCRIPTION

TOTAL OB/XF 46,846

LN	USE CODE	CLS	LAND USE DESCRIPTION	CAP	RD	LOC ZONE	FRONT	DEPTH	TOT LND UTS	UNIT TYPE	DT	DPTH FACT	% COND	TOT ADJ	UNIT PRICE	ADJ UNIT PRICE	LAND VALUE	OTHER ADJUSTMENTS AND NOTES	YEAR	DENSITY	DECL	FRZ	YR	CONSRV
1	000100	C	SFR	100		R-1	110.00	130.00	110.00	FF	1	1.11	1.00	1.11	2,800.00	3,108.00	341,880							

REVIEW DATE 09/24/2019 BY DJ Total Acres: 0.00 Total Land Value: 341,880 Market: 0 Agricultural: 0 Common: 341,880 PRINTED 08/06/2024 BY SYS