BLK 13 LOTS 3 4 & 6
OLD TOWN S/D UNR

CHAPMAN REVOCABLE TRUST/CHAPMAN CONNIE A TRUSTEE
1017 SAN FERNANDO ST
FERNANDINA BEACH, FL 32034

2024

00-00-31-1580-0013-0030

BUILDING CHARACTERISTICS

ELEMENT	CD	CONSTRUCTION
Exterior Wall	10	ABOVE AVG 100
Roof Structur	08	IRREGULAR 100
Roof Cover	12	MODULAR MT 100
Interior Wall	05	DRYWALL 100
Interior Floo	12	HARDWOOD 100
Air Condition	03	CENTRAL 100
Heating Type	04	AIR DUCTED 100
Bedrooms		3 100
Bathrooms		3 100
Frame	02	WOOD FRAME 100
Stories	0	0 100
Units		0 100
Quality	06	Quality Level 06

DOR CODE 0100 SINGLE FAMILY
MAP NUM | MKT AREA 01
NEIGHBORHOOD/LOC 1003.00

AREA TYPE	TOTAL GROSS AREA	PCT OF BASE	TOT ADJ AREA	SUBAREA MARKET VALUE
BAL	86	15	13	2,934
BAS	1,765	100	1,765	398,378
FCP	220	25	55	12,414
FCP	220	25	55	12,414
FDG	496	60	298	67,262
FOP	36	30	11	2,483
FOP	75	30	22	4,966
FOP	340	30	102	23,022
FSP	256	40	102	23,022
FUS	496	100	496	111,952
TOTALS	4,704		3,450	778,700

MARKET ADJUSTMENTS

TYPE	MDL	EFF. AREA	TOT ADJ PTS	EFF. BASE RATE	REPL. COST NEW	AYB	EYB	ECON	FNCT		NORM	% COND
0500	11	3,450	150.4752	225.71	778,700	2022	2022	0	0	0	0.00	100.00

1 SFR CUST – 100% - 2023 Heated Area: 2765 HX Base Yr 2023

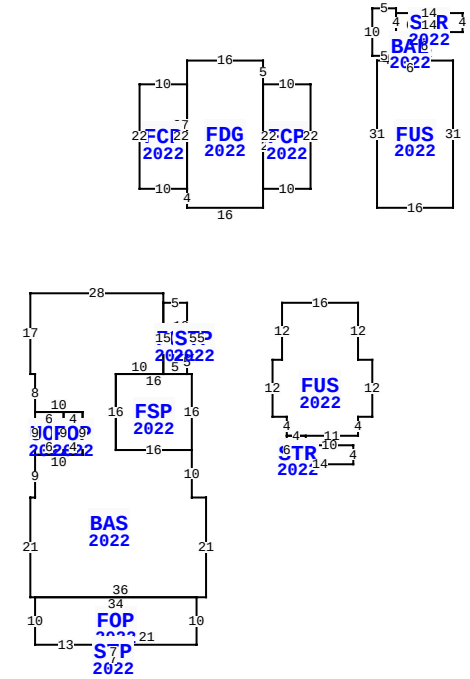

** This building has 16 Sub-Areas

1017 SAN FERNANDO ST, FERNANDINA BEACH

BLD DATE		LGL DATE	
XF DATE		LAND DATE	04/18/2024 MLU
INC DATE		AG DATE	

NASSAU COUNTY PROPERTY

PAGE 1 of 1 2

VALUATION SUMMARY

VALUATION BY		STANDARD
Tax Group: 2	Tax Dist:	
BUILDING MARKET VALUE		778,700
TOTAL MARKET OB/XF VALUE		22,175
TOTAL LAND VALUE - MARKET		396,100
TOTAL MARKET VALUE		1,196,975
SOH/AGL Deduction		76,171
ASSESSED VALUE		1,120,804
TOTAL EXEMPTION VALUE	HX HB	50,000
BASE TAXABLE VALUE		1,070,804
TOTAL JUST VALUE		1,196,975
NCON VALUE		0
INCOME VALUE		
PREVIOUS YEAR MKT VALUE		1,088,159

PERMIT NUM	DESCRIPTION	AMT	ISSUED
20200902	GARAGE	0	01/29/2021
20200795	NEW CONSTR	0	01/19/2021

SALES DATA

OFF RECORD Number	DATE	TYPE INST	Q / U	V / I	RSN CD	SALE PRICE
2374/1706	7/08/2020	WD	Q	V	01	265,000
GRANTOR: OLD TOWN PROPERTIES L						
GRANTEE: CHAPMAN REVOCABLE T						
2165/1818	12/21/2017	SW	U	V	11	100
GRANTOR: KAVANAUGH ANNE B						
GRANTEE: OLD TOWN PROPERTIES						

BUILDING NOTES

BUILDING DIMENSIONS

FOP=[YR=2022] W5 BAS=[YR=2022] N2 W28 S17 E1 S8 UOP=[YR=2022] S9 E6 FOP=[YR=2022] E4 N9 W4 S9$ N9 W6$ E10 S9 W10 S9 W1 S21 E1 FOP=[YR=2022] S10 E13 STP=[YR=2022] S3 E7 N3 W7$ E21 N10 W34$ E36 N21 W3 N10 FSP=[YR=2022] N16 W16 S16 E16$ W16 N16 E10 N15$ S15 E5 N5 STP=[YR=2022] E3 N5 W3 S5$ N10$ PTR=E20 FUS=[YR=2022] E16 S12 E3 S12 W3 S4 W11 STR=[YR=2022] S2 E10 S4 W14 N6 E4$ W4 N4 W3 N12 E2 N12$ W20$ PTR= N20 FDG=[YR=2022] N4 FCP=[YR=2022] W10 N22 E10 S22$ N27 E16 S5 FCP=[YR=2022] E10 S22 W10 N22$ S26 W16$ PTR= E40 FUS=[YR=2022] N31 E4 BAL=[YR=2022] N1 W5 N10 E5 S1 STR=[YR=2022] E14 S4 W14 N4$ S4 E6 S6 W6$ E12 S31 W16$ W40$S20$.

EXTRA FEATURES

LN	OB/XF CODE	DESCRIPTION	BLD	CAP	L	W	UNITS	UT	Adj R	ADJ UNIT PRICE	ORIG COND	YEAR ON	YEAR ACTUAL	Q	% COND	OB/XF MKT VALUE	NOTES
1	0825	BRICK	0	100	0	0	1,334.00	SF	12.50	12.50	100	2022	2022	3	100	16,675	
2	0504	FP-ELECTRI	0	100	0	0	1.00	UT	2,000.00	2,000.00	100	2022	2022	3	100	2,000	
3	0500	FP-PRE FAB	0	100	0	0	1.00	UT	3,500.00	3,500.00	100	2022	2022	3	100	3,500	

LAND DESCRIPTION

TOTAL OB/XF 22,175

LN	USE CODE	CLS	LAND USE DESCRIPTION	CAP	RD	LOC ZONE	FRONT	DEPTH	TOT LND UTS	UNIT TYPE	DT	DPTH FACT	% COND	TOT ADJ	UNIT PRICE	ADJ UNIT PRICE	LAND VALUE	OTHER ADJUSTMENTS AND NOTES	YEAR	DENSITY	DECL	FRZ	YR	CONSRV
1	000100	C	SFR	100	0010	OT-1	93.00	93.00	93.20	FF		1.00	1.00	1.00	4,250.00	4,250.00	396,100							

REVIEW DATE 12/26/2022 BY TWA Total Acres: 0.00 Total Land Value: 396,100 Market: 0 Agricultural: 0 Common: 396,100 PRINTED 08/06/2024 BY SYS