BLK 2 LOT 6
IN OR 2200/187 & 2200/190
OLD TOWN S/D UNR

CHISM MEGAN ELIZABETH
711 GARDEN ST
FERNANDINA BEACH, FL 32034

2024

00-00-31-1580-0002-0060

NASSAU COUNTY PROPERTY

BUILDING CHARACTERISTICS

ELEMENT	CD	CONSTRUCTION
Exterior Wall	10	ABOVE AVG 100
Roof Structur	03	GABLE/HIP 100
Roof Cover	03	COMP SHNGL 90
Roof Cover	12	MODULAR MT 10
Interior Wall	05	DRYWALL 100
Interior Floo	12	HARDWOOD 60
Interior Floo	14	CARPET 40
Air Condition	03	CENTRAL 100
Heating Type	04	AIR DUCTED 100
Bedrooms		3 100
Bathrooms		2 100
Frame	02	WOOD FRAME 100
Stories	2.	2. 100
Units		0 100
Quality	03	Quality Level 03
DOR CODE	0100	SINGLE FAMILY
MAP NUM		MKT AREA 01
NEIGHBORHOOD/LOC	1003.00	

AREA TYPE	TOTAL GROSS AREA	PCT OF BASE	TOT ADJ AREA	SUBAREA MARKET VALUE
BAS	1,502	100	1,502	252,132
FCP	244	25	61	10,240
FOP	261	30	78	13,094
FUS	672	100	672	112,805
STP	45	10	4	671
STR	52	10	5	839
UDG	204	55	112	18,800
TOTALS	2,980		2,434	408,582

MARKET ADJUSTMENTS

TYPE	MDL	EFF. AREA	TOT ADJ PTS	EFF. BASE RATE	REPL. COST NEW	AYB	EYB	ECON	FNCT		NORM	% COND
0900	11	2,434	137.0305	171.29	416,920	2018	2018	0	0	0	2.00	98.00

1 SNGL FAM – 100% - 2019 Heated Area: 2174 HX Base Yr 2019

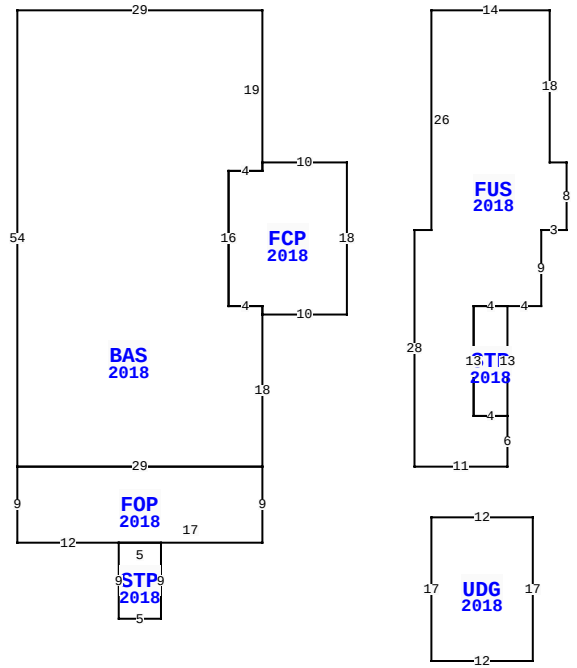

711 GARDEN ST, FERNANDINA BEACH

BLD DATE		LGL DATE	
XF DATE		LAND DATE	04/18/2024 MLU
INC DATE		AG DATE	

VALUATION SUMMARY

VALUATION BY		STANDARD
Tax Group: 2	Tax Dist:	
BUILDING MARKET VALUE		408,582
TOTAL MARKET OB/XF VALUE		4,088
TOTAL LAND VALUE - MARKET		217,855
TOTAL MARKET VALUE		630,525
SOH/AGL Deduction		242,056
ASSESSED VALUE		388,469
TOTAL EXEMPTION VALUE	HX HB	50,000
BASE TAXABLE VALUE		338,469
TOTAL JUST VALUE		630,525
NCON VALUE		0
INCOME VALUE		
PREVIOUS YEAR MKT VALUE		557,349

PERMIT NUM	DESCRIPTION	AMT	ISSUED
20181890	CO ISSUED	0	10/29/2018
20171890	NEW CONSTR	247,525	06/01/2018

SALES DATA

OFF RECORD Number	DATE	TYPE INST	Q U	V I	RSN CD	SALE PRICE
2200/0190	5/30/2018	WD	Q	V	03	30,000
GRANTOR: ANDERSON HOWARD & BAK						
GRANTEE: CHISM MEGAN E						
2200/0187	5/30/2018	WD	Q	V	03	35,000
GRANTOR: KILLHOUR GILSON E & C						
GRANTEE: CHISM MEGAN ELIZABE						

BUILDING NOTES

BUILDING DIMENSIONS

BAS=[YR=2018] W29 S54 FOP=[YR=2018] S9 E12 STP=[YR=2018] S9 E5 N9 W5$ E17 N9 W29$ E29 N18 FCP=[YR=2018] E10 N18 W10 S1 W4 S16 E4 S1$ N1 W4 N16 E4 N19$ PTR=E20 FUS=[YR=2018] E14 S18 E2 S8 W3 S9 W4 STR=[YR=2018] S13 W4 N13 E4$ W4 S13 E4 S6 W11 N28 E2 N26$ W20$ PTR=E20 S60 UDG=[YR=2018] E12 S17 W12 N17$ N60 W20$.

EXTRA FEATURES

LN	OB/XF CODE	DESCRIPTION	BLD	CAP	L	W	UNITS	UT	Adj R	ADJ UNIT PRICE	ORIG COND	YEAR ON	YEAR ACTUAL	Q	% COND	OB/XF MKT VALUE	NOTES
1	0855	CONC PAVER	0	100	0	0	602.00	SF	7.00	7.00	100	2018	2018	3	97	4,088	

LAND DESCRIPTION

TOTAL OB/XF 4,088

LN	USE CODE	CLS	LAND USE DESCRIPTION	CAP	RD	LOC ZONE	FRONT	DEPTH	TOT LND UTS	UNIT TYPE	DT	DPTH FACT	% COND	TOT ADJ	UNIT PRICE	ADJ UNIT PRICE	LAND VALUE	OTHER ADJUSTMENTS AND NOTES	YEAR	DENSITY	DECL	FRZ	YR	CONSRV
1	000100	C	SFR	100		OT-1	46.00	93.00	46.60	FF		1.00	1.00	1.10	4,250.00	4,675.00	217,855							

REVIEW DATE 12/26/2022 BY TWA Total Acres: 0.00 Total Land Value: 217,855 Market: 0 Agricultural: 0 Common: 217,855 PRINTED 08/06/2024 BY SYS