LOT 30
OCEAN VIEW ESTATES PB 6/25-26

ROBERTSON SIDNEY A
859 LAGUNA DR
FERNANDINA BEACH, FL 32034

2024

00-00-31-156E-0030-0000

BUILDING CHARACTERISTICS

ELEMENT	CD	CONSTRUCTION
Exterior Wall	05	AVERAGE 70
Exterior Wall	16	WD FR STUC 30
Roof Structur	08	IRREGULAR 100
Roof Cover	03	COMP SHNGL 100
Interior Wall	05	DRYWALL 100
Interior Floo	12	HARDWOOD 80
Interior Floo	15	HARDTILE 20
Air Condition	03	CENTRAL 100
Heating Type	04	AIR DUCTED 100
Bedrooms		3 100
Bathrooms		2 100
Frame	02	WOOD FRAME 100
Stories	1.	1. 100
Units		0 100
Occupancy	00	NONE 100
Quality	05	Quality Level 05
DOR CODE	0100	SINGLE FAMILY
MAP NUM		MKT AREA 01
NEIGHBORHOOD/LOC	1081.00	

AREA TYPE	TOTAL GROSS AREA	PCT OF BASE	TOT ADJ AREA	SUBAREA MARKET VALUE
BAS	1,742	100	1,742	244,473
FEP	180	80	144	20,209
FGR	424	55	233	32,699
FOP	28	30	8	1,123
TOTALS	2,374		2,127	298,504

MARKET ADJUSTMENTS

TYPE	MDL	EFF. AREA	TOT ADJ PTS	EFF. BASE RATE	REPL. COST NEW	AYB	EYB	ECON	FNCT		NORM	% COND
0900	01	2,127	124.5090	155.64	331,046	1996	2003	0	0	0	9.83	90.17

1 SNGL FAM – 100% - 2023 Heated Area: 1742 HX Base Yr 2023

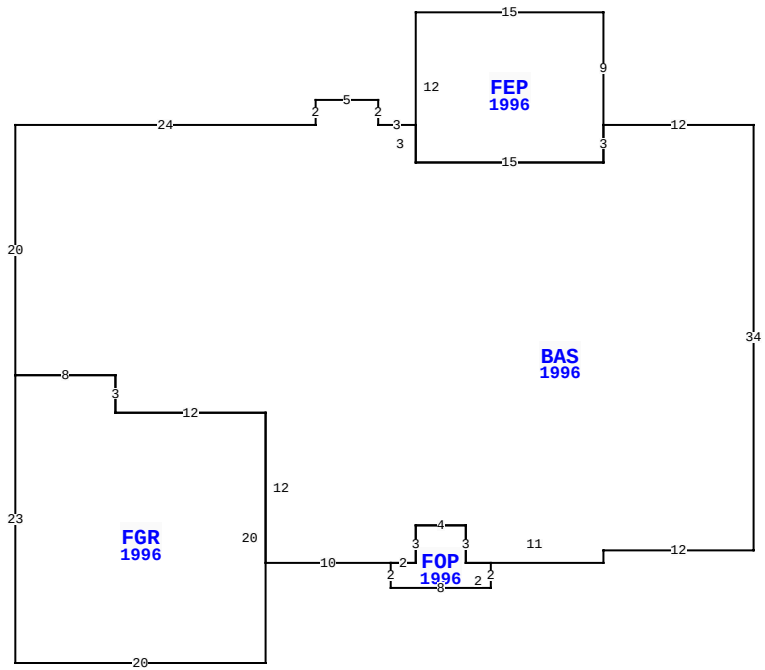

859 W LAGUNA DR, FERNANDINA BEACH

BLD DATE		LGL DATE	
XF DATE		LAND DATE	
INC DATE		AG DATE	

NASSAU COUNTY PROPERTY

PAGE 1 of 1 2

VALUATION SUMMARY

VALUATION BY		STANDARD
Tax Group: 2	Tax Dist:	
BUILDING MARKET VALUE		298,504
TOTAL MARKET OB/XF VALUE		21,632
TOTAL LAND VALUE - MARKET		275,000
TOTAL MARKET VALUE		595,136
SOH/AGL Deduction		0
ASSESSED VALUE		595,136
TOTAL EXEMPTION VALUE	HX HB	50,000
BASE TAXABLE VALUE		545,136
TOTAL JUST VALUE		595,136
NCON VALUE		0
INCOME VALUE		
PREVIOUS YEAR MKT VALUE		582,862

PERMIT NUM	DESCRIPTION	AMT	ISSUED
20222704	REPAIR/RRF	17,500	12/20/2022
20120680	SCREEN ROOM / SPA	11,000	04/16/2012
20120637	H/AC	2,500	04/13/2012
20080484	REPAIR STUCCO	1,500	03/25/2008
9845	NEW CONSTR	85,295	06/04/1996

SALES DATA

OFF RECORD Number	DATE	TYPE INST	Q U	V I	RSN CD	SALE PRICE
2581/0883	8/01/2022	WD	Q	I	01	770,000
GRANTOR: LUMB ELLINOR L/E						
GRANTEE: ROBERTSON SIDNEY A						
2552/0339	4/04/2022	LE	U	I	11	100
GRANTOR: LUMB ELLINOR FKA BURK						
GRANTEE: LUMB JONATHAN & MAR						

BUILDING NOTES

BUILDING DIMENSIONS

BAS=[YR=1996] W12 FEP=[YR=1996] N9 W15 S12 E15N3$ S3 W15 N3W3 N2 W5 S2 W24 S20 FGR=[YR=1996] S23 E20 N20 W12 N3 W8 $ E8 S3 E12 S12 E10 FOP=[YR=1996] S2 E8 N2 W2 N3 W4 S3 W2 $ E2 N3 E4 S3 E11 N1 E12 N34 $.

EXTRA FEATURES

LN	OB/XF CODE	DESCRIPTION	BLD	CAP	L	W	UNITS	UT	Adj R	ADJ UNIT PRICE	ORIG COND	YEAR ON	YEAR ACTUAL	Q	% COND	OB/XF MKT VALUE	NOTES
1	0500	FP-PRE FAB	0	100	0	0	1.00	UT	3,500.00	3,500.00	100	1996	1996	3	79	2,765	
2	0810	CONCRETE A	0	100	0	0	597.00	SF	6.50	6.50	100	1996	1996	3	72	2,794	
3	0910	SCRN RM L	0	100	0	0	590.00	SF	15.00	15.00	100	2012	2012	3	55	4,868	
4	0866	POOL FIBER	0	100	16	9	144.00	SF	72.00	72.00	100	2012	2012	3	55	5,702	
5	0845	KOOL DECK	0	100	0	0	446.00	SF	13.27	13.27	100	2012	2012	3	93	5,503	

LAND DESCRIPTION

TOTAL OB/XF 21,632

LN	USE CODE	CLS	LAND USE DESCRIPTION	CAP	RD	LOC ZONE	FRONT	DEPTH	TOT LND UTS	UNIT TYPE	DT	DPTH FACT	% COND	TOT ADJ	UNIT PRICE	ADJ UNIT PRICE	LAND VALUE	OTHER ADJUSTMENTS AND NOTES	YEAR	DENSITY	DECL	FRZ	YR	CONSRV
1	000100	C	SFR	100	0003	R-1	0.00	0.00	1.00	LT		1.00	1.00	1.00	275,000.00	275,000.00	275,000							

REVIEW DATE 07/06/2023 BY TW Total Acres: 0.00 Total Land Value: 275,000 Market: 0 Agricultural: 0 Common: 275,000 PRINTED 08/06/2024 BY SYS