LOT 38
OCEAN RIDGE PB 5/103 & 104

DAILEY MICHAEL A & JOHNYE
107 EIDER COURT
FERNANDINA BEACH, FL 32034

**2024**

**00-00-31-155R-0038-0000**

## NASSAU COUNTY PROPERTY



## BUILDING CHARACTERISTICS

| ELEMENT | CD | CONSTRUCTION |
|---|---|---|
| Exterior Wall | 05 | AVERAGE 80 |
| Exterior Wall | 16 | WD FR STUC 20 |
| Roof Structur | 03 | GABLE/HIP 100 |
| Roof Cover | 03 | COMP SHNGL 100 |
| Interior Wall | 05 | DRYWALL 100 |
| Interior Floo | 11 | CLAY TILE 70 |
| Interior Floo | 12 | HARDWOOD 30 |
| Air Condition | 03 | CENTRAL 100 |
| Heating Type | 04 | AIR DUCTED 100 |
| Bedrooms | | 3 100 |
| Bathrooms | | 2 100 |
| Frame | 02 | WOOD FRAME 100 |
| Stories | 2. | 2. 100 |
| Units | | 0 100 |
| BUD8 Adjustme | 02 | DIST FB 100 |
| Quality | 03 | Quality Level 03 |
| DOR CODE | 0100 | SINGLE FAMILY |
| MAP NUM | | MKT AREA 01 |
| NEIGHBORHOOD/LOC | 1075.00 | |

| AREA TYPE | TOTAL GROSS AREA | PCT OF BASE | TOT ADJ AREA | SUBAREA MARKET VALUE |
|---|---|---|---|---|
| BAS | 1,366 | 100 | 1,366 | 166,168 |
| BAS | 195 | 100 | 195 | 23,721 |
| FGR | 494 | 55 | 272 | 33,088 |
| FOP | 84 | 30 | 25 | 3,041 |
| FOP | 120 | 30 | 36 | 4,379 |
| FUS | 501 | 100 | 501 | 60,944 |
| TOTALS | 2,760 | | 2,395 | 291,340 |

## MARKET ADJUSTMENTS

| TYPE | MDL | EFF. AREA | TOT ADJ PTS | EFF. BASE RATE | REPL. COST NEW | AYB | EYB | ECON | FNCT | | NORM | % COND |
|---|---|---|---|---|---|---|---|---|---|---|---|---|
| 0900 | 01 | 2,395 | 112.8960 | 141.12 | 337,982 | 1987 | 1995 | 0 | 0 | 0 | 13.80 | 86.20 |

1 SNGL FAM – 100% - 2024 Heated Area: 2062 HX Base Yr 2024

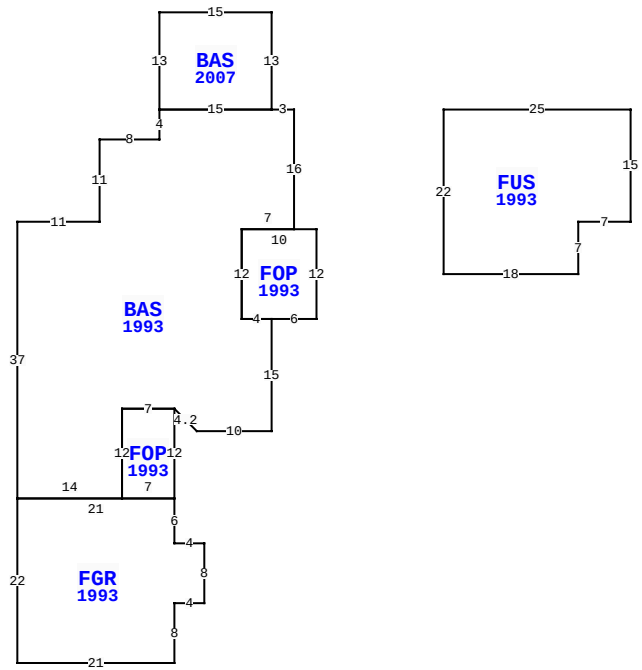


107 EIDER CT, FERNANDINA BEACH

| | | | |
|---|---|---|---|
| BLD DATE | | LGL DATE | |
| XF DATE | | LAND DATE | 07/24/2024 MLU |
| INC DATE | | AG DATE | |

## VALUATION SUMMARY

| | | |
|---|---|---|
| VALUATION BY | | STANDARD |
| Tax Group: 2 | Tax Dist: | |
| BUILDING MARKET VALUE | | 291,340 |
| TOTAL MARKET OB/XF VALUE | | 7,871 |
| TOTAL LAND VALUE - MARKET | | 260,000 |
| TOTAL MARKET VALUE | | 559,211 |
| SOH/AGL Deduction | | 170,390 |
| ASSESSED VALUE | | 388,821 |
| TOTAL EXEMPTION VALUE | HX HB | 50,000 |
| BASE TAXABLE VALUE | | 338,821 |
| TOTAL JUST VALUE | | 559,211 |
| NCON VALUE | | 0 |
| INCOME VALUE | | |
| PREVIOUS YEAR MKT VALUE | | 514,218 |

| PERMIT NUM | DESCRIPTION | AMT | ISSUED |
|---|---|---|---|
| 20060128 | H/AC | 2,000 | 01/20/2006 |
| 20060017 | REMODEL | 1,000 | 01/04/2006 |
| 20041967 | REPAIR/RRF | 3,000 | 10/25/2004 |
| BP4132 | N/A | 54,750 | 01/20/1987 |

## SALES DATA

| OFF RECORD Number | DATE | TYPE INST | Q / U | V / I | RSN CD | SALE PRICE |
|---|---|---|---|---|---|---|
| 2613/1191 | 1/13/2023 | WD | Q | I | 01 | 728,000 |
| GRANTOR: TROXEL PAMELA D | | | | | | |
| GRANTEE: DAILEY MICHAEL A & | | | | | | |
| 1281/0424 | 12/15/2004 | QC | U | I | 01 | 181,200 |
| GRANTOR: TROXEL PATRICIA H & R | | | | | | |
| GRANTEE: TROXEL PAMELA D | | | | | | |

## BUILDING NOTES

## BUILDING DIMENSIONS

BAS=[YR=1993;ORIG=0,0] W3 W15 S4 W8 S11 W11 S37 E14 N12 E7
D3R3 E10 N15 W4 N12 E7 N16 $
FUS=[YR=1993;ORIG=20,0] E25 S15 W7 S7 W18 N22 $
FGR=[YR=1993;ORIG=-37,52] S22 E21 N8 E4 N8 W4 N6 W21 $
BAS=[YR=2007;ORIG=-3,0] N13 W15 S13 E15 $
FOP=[YR=1993;ORIG=-3,28] E6 N12 W10 S12 E4 $
FOP=[YR=1993;ORIG=-16,52] N12 W7 S12 E7 $
PTR=[ORIG=0,0] E20 W20 $
.

## EXTRA FEATURES

| LN | OB/XF CODE | DESCRIPTION | BLD | CAP | L | W | UNITS | UT | Adj R | ADJ UNIT PRICE | ORIG COND | YEAR ON | YEAR ACTUAL | Q | % COND | OB/XF MKT VALUE | NOTES |
|---|---|---|---|---|---|---|---|---|---|---|---|---|---|---|---|---|---|
| 1 | 0500 | FP-PRE FAB | 0 | 100 | 0 | 0 | 1.00 | UT | 3,500.00 | 3,500.00 | 100 | 1987 | 1987 | 3 | 62 | 2,170 | |
| 2 | 0811 | CONCRETE B | 0 | 100 | 42 | 17 | 765.00 | SF | 5.20 | 5.20 | 100 | 1987 | 1987 | 3 | 52 | 2,069 | |
| 3 | 0810 | CONCRETE A | 0 | 100 | 43 | 3 | 143.00 | SF | 6.50 | 6.50 | 100 | 1987 | 1987 | 3 | 52 | 483 | |
| 4 | 0855 | CONC PAVER | 0 | 100 | 0 | 0 | 384.00 | SF | 10.00 | 10.00 | 100 | 2002 | 2002 | 3 | 82 | 3,149 | |

## LAND DESCRIPTION

TOTAL OB/XF 7,871

| LN | USE CODE | CLS | LAND USE DESCRIPTION | CAP | RD | LOC ZONE | FRONT | DEPTH | TOT LND UTS | UNIT TYPE | DT | DPTH FACT | % COND | TOT ADJ | UNIT PRICE | ADJ UNIT PRICE | LAND VALUE | OTHER ADJUSTMENTS AND NOTES | YEAR | DENSITY | DECL | FRZ | YR | CONSRV |
|---|---|---|---|---|---|---|---|---|---|---|---|---|---|---|---|---|---|---|---|---|---|---|---|---|
| 1 | 000100 | C | SFR | 100 | | R-2 | 0.00 | 0.00 | 1.00 | LT | | 1.00 | 1.00 | 1.00 | 260,000.00 | 260,000.00 | 260,000 | | | | | | | |

REVIEW DATE 08/21/2019 BY DJA Total Acres: 0.00 Total Land Value: 260,000 Market: 0 Agricultural: 0 Common: 260,000 PRINTED 08/06/2024 BY SYS