LOT 26
IN OR 2214/1645
OCEAN RIDGE PB 5/103 & 104

WILCOX ROBERT E JR
151 IBIS CT
FERNANDINA BEACH, FL 32034

2024

00-00-31-155R-0026-0000

BUILDING CHARACTERISTICS

ELEMENT	CD	CONSTRUCTION
Exterior Wall	05	AVERAGE 80
Exterior Wall	16	WD FR STUC 20
Roof Structur	03	GABLE/HIP 100
Roof Cover	03	COMP SHNGL 100
Interior Wall	05	DRYWALL 100
Interior Floo	14	CARPET 80
Interior Floo	11	CLAY TILE 20
Air Condition	03	CENTRAL 100
Heating Type	04	AIR DUCTED 100
Bedrooms		3 100
Bathrooms		2 100
Frame	02	WOOD FRAME 100
Stories	2.	2. 100
Units		0 100
BUD8 Adjustme	02	DIST FB 100
Quality	03	Quality Level 03
DOR CODE	0100	SINGLE FAMILY
MAP NUM		MKT AREA 01
NEIGHBORHOOD/LOC	1075.00	

AREA TYPE	TOTAL GROSS AREA	PCT OF BASE	TOT ADJ AREA	SUBAREA MARKET VALUE
BAS	1,337	100	1,337	154,169
FEP	185	80	148	17,066
FGR	494	55	272	31,364
FOP	48	30	14	1,615
FOP	84	30	25	2,883
FUS	460	100	460	53,042
PTO	72	5	4	461
TOTALS	2,680		2,260	260,600

MARKET ADJUSTMENTS

TYPE	MDL	EFF. AREA	TOT ADJ PTS	EFF. BASE RATE	REPL. COST NEW	AYB	EYB	ECON	FNCT		NORM	% COND
0900	01	2,260	107.0160	133.77	302,320	1988	1995	0	0	0	13.80	86.20

1 SNGL FAM – 100% - 2022 Heated Area: 1797 HX Base Yr 2022

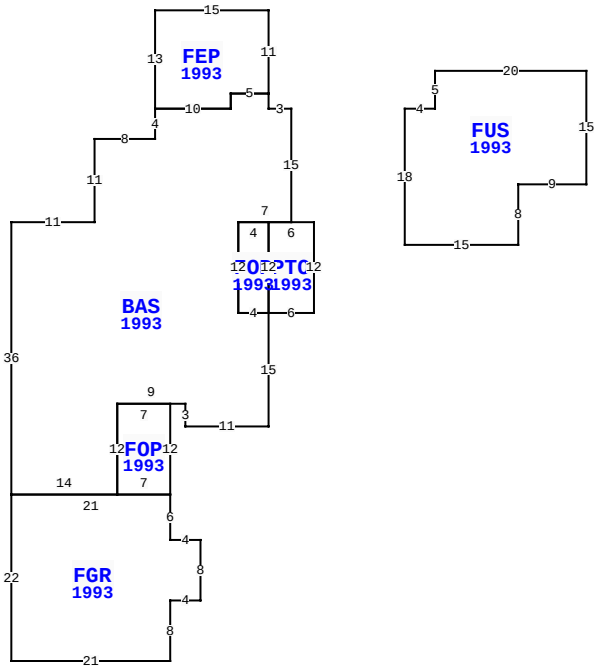

151 IBIS CT, FERNANDINA BEACH

BLD DATE		LGL DATE	
XF DATE		LAND DATE	07/24/2024 MLU
INC DATE		AG DATE	

NASSAU COUNTY PROPERTY

PAGE 1 of 1 2

VALUATION SUMMARY

VALUATION BY		STANDARD
Tax Group: 2	Tax Dist:	
BUILDING MARKET VALUE		260,600
TOTAL MARKET OB/XF VALUE		6,472
TOTAL LAND VALUE - MARKET		260,000
TOTAL MARKET VALUE		527,072
SOH/AGL Deduction		48,361
ASSESSED VALUE		478,711
TOTAL EXEMPTION VALUE	HX HB	50,000
BASE TAXABLE VALUE		428,711
TOTAL JUST VALUE		527,072
NCON VALUE		0
INCOME VALUE		
PREVIOUS YEAR MKT VALUE		484,486

PERMIT NUM	DESCRIPTION	AMT	ISSUED
20131097	REPIPE	1,800	05/16/2013
20120225	H. SHUTT	7,000	02/09/2012
20052568	REPAIR/RRF	8,000	08/30/2005

SALES DATA

OFF RECORD Number	DATE	TYPE INST	Q U /	V I /	RSN CD	SALE PRICE
2214/1645	7/30/2018	LE	U	I	11	100
GRANTOR: BURGESS FRANCES G						
GRANTEE: WILCOX ROBERT E JR						
2182/1045	3/09/2018	QC	U	I	11	100
GRANTOR: WILCOX ROBERT E JR						
GRANTEE: BURGESS FRANCES G						

BUILDING NOTES

BUILDING DIMENSIONS

BAS=[YR=1993] W3 N2 FEP=[YR=1993] N11 W15 S13 E10 N2 E5$ W5 S2 W10 S4 W8 S11 W11 S36 FGR=[YR=1993] S22 E21 N8 E4 N8 W4 N6 FOP=[YR=1993] N12 W7 S12 E7$ W21$ E14 N12 E9 S3 E11 N15 PTO=[YR=1993] E6 N12 W6 FOP=[YR=1993] W4 S12 E4 N12$ S12$ W4 N12 E7 N15 $ PTR= E15 FUS=[YR=1993] E4 N5 E20 S15 W9 S8 W15 N18$ W15$.

EXTRA FEATURES

LN	OB/XF CODE	DESCRIPTION	BLD	CAP	L	W	UNITS	UT	Adj R	ADJ UNIT PRICE	ORIG COND	YEAR ON	YEAR ACTUAL	Q	% COND	OB/XF MKT VALUE	NOTES
1	0811	CONCRETE B	0	100	0	0	636.00	SF	5.20	5.20	100	1988	1988	3	54.5	1,802	
2	0810	CONCRETE A	0	100	0	0	149.00	SF	6.50	6.50	100	1988	1988	3	54.5	528	
3	0858	SCULP CONC	0	100	0	0	354.00	SF	13.00	13.00	100	1994	1994	3	90	4,142	

LAND DESCRIPTION

TOTAL OB/XF 6,472

LN	USE CODE	CLS	LAND USE DESCRIPTION	CAP	RD	LOC ZONE	FRONT	DEPTH	TOT LND UTS	UNIT TYPE	DT	DPTH FACT	% COND	TOT ADJ	UNIT PRICE	ADJ UNIT PRICE	LAND VALUE	OTHER ADJUSTMENTS AND NOTES	YEAR	DENSITY	DECL	FRZ	YR	CONSRV
1	000100	C	SFR	100		R-2	0.00	0.00	1.00	LT		1.00	1.00	1.00	260,000.00	260,000.00	260,000							

REVIEW DATE 01/06/2023 BY TWA Total Acres: 0.00 Total Land Value: 260,000 Market: 0 Agricultural: 0 Common: 260,000 PRINTED 08/06/2024 BY SYS