LOT 7
OCEAN RIDGE PB 5/103 & 104

USHER PETER S & ANN C/
116 OCEAN RIDGE DR
FERNANDINA BEACH, FL 32034

2024

00-00-31-155R-0007-0000

BUILDING CHARACTERISTICS

ELEMENT	CD	CONSTRUCTION
Exterior Wall	05	AVERAGE 80
Exterior Wall	16	WD FR STUC 20
Roof Structur	03	GABLE/HIP 100
Roof Cover	03	COMP SHNGL 100
Interior Wall	05	DRYWALL 100
Interior Floo	11	CLAY TILE 50
Interior Floo	14	CARPET 50
Air Condition	03	CENTRAL 100
Heating Type	04	AIR DUCTED 100
Bedrooms		3 100
Bathrooms		2 100
Frame	02	WOOD FRAME 100
Stories	2.	2. 100
Units		0 100
BUD8 Adjustme	02	DIST FB 100
Quality	03	Quality Level 03
DOR CODE	0100	SINGLE FAMILY
MAP NUM		MKT AREA 01
NEIGHBORHOOD/LOC	1075.00	

AREA TYPE	TOTAL GROSS AREA	PCT OF BASE	TOT ADJ AREA	SUBAREA MARKET VALUE
BAS	1,245	100	1,245	147,370
BAS	111	100	111	13,139
FGR	536	55	295	34,919
FOP	88	30	26	3,077
FSP	168	40	67	7,930
FUS	480	100	480	56,818
TOTALS	2,628		2,224	263,255

MARKET ADJUSTMENTS

TYPE	MDL	EFF. AREA	TOT ADJ PTS	EFF. BASE RATE	REPL. COST NEW	AYB	EYB	ECON	FNCT		NORM	% COND
0900	01	2,224	109.8580	137.32	305,400	1986	1995	0	0	0	13.80	86.20

1 SNGL FAM – 100% - 2013 Heated Area: 1836 HX Base Yr 2013

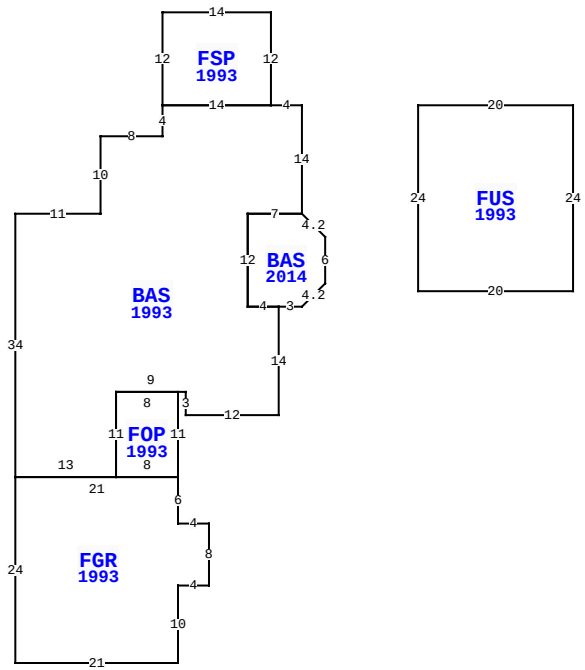

BLD DATE	04/08/2008 DJ	LGL DATE	
XF DATE		LAND DATE	07/24/2024 MLU
INC DATE		AG DATE	

116 OCEAN RIDGE DR, FERNANDINA BEACH

NASSAU COUNTY PROPERTY

PAGE 1 of 1 2

VALUATION SUMMARY

VALUATION BY		STANDARD
Tax Group: 2	Tax Dist:	
BUILDING MARKET VALUE		263,255
TOTAL MARKET OB/XF VALUE		6,114
TOTAL LAND VALUE - MARKET		325,000
TOTAL MARKET VALUE		594,369
SOH/AGL Deduction		309,862
ASSESSED VALUE		284,507
TOTAL EXEMPTION VALUE	HX HB	50,000
BASE TAXABLE VALUE		234,507
TOTAL JUST VALUE		594,369
NCON VALUE		0
INCOME VALUE		
PREVIOUS YEAR MKT VALUE		548,789

PERMIT NUM	DESCRIPTION	AMT	ISSUED
20141575	REMODEL	9,689	07/18/2014
20062718	REMODEL	200	12/11/2006
20052750	REPAIR/RRF	8,000	09/28/2005

SALES DATA

OFF RECORD Number	DATE	TYPE INST	Q / U	V / I	RSN CD	SALE PRICE
2637/546	4/21/2023	QC	U	I	11	100
GRANTOR: USHER PETER S & ANN C						
GRANTEE: USHER ZACHARY J						
1522/1747	9/04/2007	WD	Q	I		363,900
GRANTOR: WRIGHT KATHRYN HICKEY						
GRANTEE: USHER PETER S & ANN						

BUILDING NOTES

BUILDING DIMENSIONS

BAS=[YR=1993] W4 FSP=[YR=1993] N12 W14 S12 E14 $W14 S4 W8 S10 W11 S34 FGR=[YR=1993] S24E21 N10 E4 N8 W4 N6 FOP=[YR=1993] N11 W8 S11 E8 $ W21 $ E13 N11 E9 S3E12 N14 BAS=[YR=2014] E3 U3 R3 N6 U3 L3 W7 S12 E4 $ W4 N12 E7 N14 $ PTR= E15 FUS=[YR=1993] E20 S24W20 N24 $ W15 $.

EXTRA FEATURES

LN	OB/XF CODE	DESCRIPTION	BLD	CAP	L	W	UNITS	UT	Adj R	ADJ UNIT PRICE	ORIG COND	YEAR ON	YEAR ACTUAL	Q	% COND	OB/XF MKT VALUE	NOTES
1	0811	CONCRETE B	0	100	40	17	783.00	SF	5.20	5.20	100	1986	1986	3	49.5	2,015	
2	0811	CONCRETE B	0	100	47	3	141.00	SF	5.20	5.20	100	1986	1986	3	49.5	363	
3	0500	FP-PRE FAB	0	100	0	0	1.00	UT	3,500.00	3,500.00	100	1986	1986	3	60	2,100	
4	0855	CONC PAVER	0	100	0	0	246.00	SF	7.00	7.00	100	2014	2014	3	95	1,636	

LAND DESCRIPTION

TOTAL OB/XF 6,114

LN	USE CODE	CLS	LAND USE DESCRIPTION	CAP	RD	LOC ZONE	FRONT	DEPTH	TOT LND UTS	UNIT TYPE	DT	DPTH FACT	% COND	TOT ADJ	UNIT PRICE	ADJ UNIT PRICE	LAND VALUE	OTHER ADJUSTMENTS AND NOTES	YEAR	DENSITY	DECL	FRZ	YR	CONSRV
1	000133	C	SFR LAKE	100		R-2	0.00	0.00	1.00	LT		1.00	1.00	1.25	260,000.00	325,000.00	325,000							

REVIEW DATE 08/21/2019 BY DJA Total Acres: 0.00 Total Land Value: 325,000 Market: 0 Agricultural: 0 Common: 325,000 PRINTED 08/06/2024 BY SYS