BLOCK 7 LOT 3
IN OR 2150/392
OCEAN CITY N PB 2/38

SCHRIEVER DR PAUL & AMY
736 SFLETCHER AVE
FERNANDINA BEACH, FL 32034

2024

00-00-31-1520-0007-0030

BUILDING CHARACTERISTICS

ELEMENT	CD	CONSTRUCTION
Exterior Wall	16	WD FR STUC 100
Roof Structur	03	GABLE/HIP 100
Roof Cover	03	COMP SHNGL 100
Interior Wall	05	DRYWALL 100
Interior Floo	14	CARPET 70
Interior Floo	08	SHT VINYL 30
Air Condition	03	CENTRAL 100
Heating Type	04	AIR DUCTED 100
Bedrooms		3 100
Bathrooms		2 100
Frame	07	SPECIAL 100
Stories	2.	2. 100
Units		0 100
BUD8 Adjustme	02	DIST FB 100
Occupancy	00	NONE 100
Quality	04	Quality Level 04
DOR CODE	0100	SINGLE FAMILY
MAP NUM		MKT AREA 01
NEIGHBORHOOD/LOC	1051.00	

AREA TYPE	TOTAL GROSS AREA	PCT OF BASE	TOT ADJ AREA	SUBAREA MARKET VALUE
BAL	84	15	13	1,898
BAS	1,200	100	1,200	175,213
DCK	65	10	6	876
DCK	480	10	48	7,008
FOP	152	30	46	6,717
FUS	315	100	315	45,994
STR	33	10	3	438
STR	48	10	5	730
UGR	630	45	284	41,467
TOTALS	3,007		1,920	280,341

MARKET ADJUSTMENTS

TYPE	MDL	EFF. AREA	TOT ADJ PTS	EFF. BASE RATE	REPL. COST NEW	AYB	EYB	ECON	FNCT		NORM	% COND
0500	01	1,920	113.1900	169.78	325,978	1983	1995	0	0	0	14.00	86.00

1 SFR CUST – 0% - 0 Heated Area: 1515 HX Base Yr

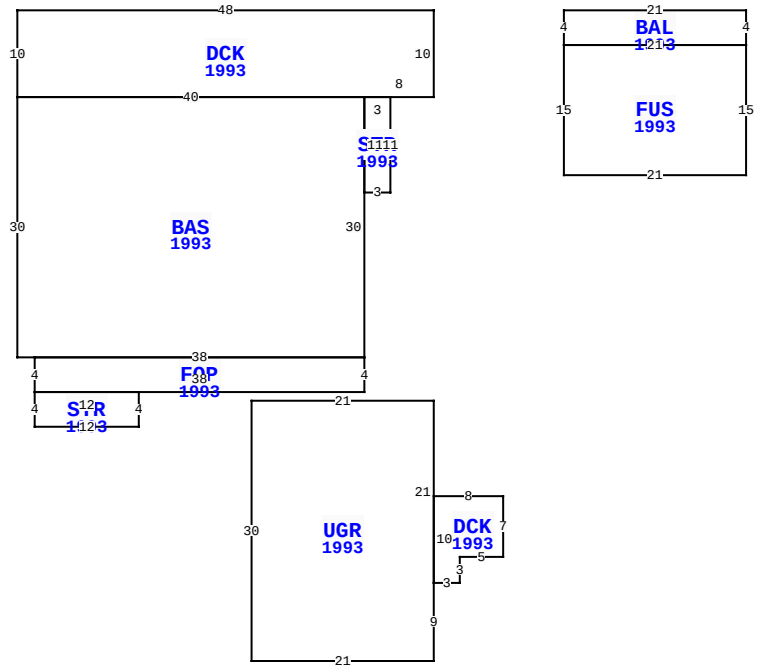

736 S FLETCHER AVE, FERNANDINA BEACH

BLD DATE		LGL DATE	
XF DATE		LAND DATE	05/07/2024 MLU
INC DATE		AG DATE	

NASSAU COUNTY PROPERTY

PAGE 1 of 1 2

VALUATION SUMMARY

VALUATION BY	STANDARD
Tax Group: 2	Tax Dist:
BUILDING MARKET VALUE	280,341
TOTAL MARKET OB/XF VALUE	8,732
TOTAL LAND VALUE - MARKET	1,237,500
TOTAL MARKET VALUE	1,526,573
SOH/AGL Deduction	369,627
ASSESSED VALUE	1,156,946
TOTAL EXEMPTION VALUE	0
BASE TAXABLE VALUE	1,156,946
TOTAL JUST VALUE	1,526,573
NCON VALUE	0
INCOME VALUE	
PREVIOUS YEAR MKT VALUE	1,401,986

PERMIT NUM	DESCRIPTION	AMT	ISSUED
20081595	REMODEL	9,500	10/21/2008
20080850	H/AC	3,500	05/19/2008
2004396	REPAIR/RRF	2,000	11/21/2000
20004267	REPAIR/RRF	18,000	10/31/2000
3542B	N/A	3,600	12/01/1985

SALES DATA

OFF RECORD Number	DATE	TYPE INST	Q / U	V / I	RSN CD	SALE PRICE
2150/0392	10/04/2017	WD	Q	I	01	903,000
GRANTOR: RUSSELL JERRY L & LYN						
GRANTEE: SCHRIEVER DR PAUL &						
1518/0964	8/10/2007	WD	Q	I		975,000
GRANTOR: LAUGHINGHOUSE TERRY						
GRANTEE: RUSSELL JERRY L & L						

BUILDING NOTES

BUILDING DIMENSIONS

DCK=[YR=1993] W48 S10 BAS=[YR=1993] S30 E2 FOP=[YR=1993] S4 STR=[YR=1993] S4 E12 N4 W12 $ E38 N4 W38 $ E38 N30 W40 $ E40 STR=[YR=1993] S11 E3 N11 W3 $ E8 N10 $ PTR= E15 BAL=[YR=1993] E21 S4 FUS=[YR=1993] S15 W21 N15 E21 $ W21 N4 $ W15 $ PTR= S45 UGR=[YR=1993] W21 S30 E21 N9 DCK=[YR=1993] E3 N3 E5 N7 W8 S10 $ N21 $ N45 $.

EXTRA FEATURES

LN	OB/XF CODE	DESCRIPTION	BLD	CAP	L	W	UNITS	UT	Adj R	ADJ UNIT PRICE	ORIG COND	YEAR ON	YEAR ACTUAL	Q	% COND	OB/XF MKT VALUE	NOTES
1	0810	CONCRETE A	0	0	21	26	546.00	SF	6.50	6.50	100	1986	1986	3	49.5	1,757	
2	0462	ST/AL FNC	0	0	0	0	930.00	SF	10.00	10.00	100	2014	2014	3	75	6,975	

LAND DESCRIPTION

TOTAL OB/XF 8,732

LN	USE CODE	CLS	LAND USE DESCRIPTION	CAP	RD	LOC ZONE	FRONT	DEPTH	TOT LND UTS	UNIT TYPE	DT	DPTH FACT	% COND	TOT ADJ	UNIT PRICE	ADJ UNIT PRICE	LAND VALUE	OTHER ADJUSTMENTS AND NOTES	YEAR	DENSITY	DECL	FRZ	YR	CONSRV
1	000120	C	SFR OCN FT	0	0006	R-1	75.00	68.00	75.00	FF		1.00	1.00	1.00	16,500.00	16,500.00	1,237,500							

REVIEW DATE 05/12/2019 BY KBA Total Acres: 0.00 Total Land Value: 1,237,500 Market: 0 Agricultural: 0 Common: 1,237,500 PRINTED 08/06/2024 BY SYS