BLOCK 4 LOT 6 &
TRACT A OCEAN VIEW EST PB 6/25
IN OR 1989/45

REGISTER GARY E & JOANNE G
4632 SUB CHASER CT
JACKSONVILLE, FL 32244

2024

00-00-31-1520-0004-0060

NASSAU COUNTY PROPERTY

BUILDING CHARACTERISTICS

ELEMENT	CD	CONSTRUCTION
Exterior Wall	07	ASB SHNGLE 100
Roof Structur	03	GABLE/HIP 100
Roof Cover	03	COMP SHNGL 100
Interior Wall	02	WALL BD/WD 100
Interior Floo	12	HARDWOOD 60
Interior Floo	08	SHT VINYL 40
Air Condition	03	CENTRAL 100
Heating Type	04	AIR DUCTED 100
Bedrooms		4 100
Bathrooms		2 100
Frame	02	WOOD FRAME 100
Stories	2.	2. 100
Units		0 100
BUD8 Adjustme	02	DIST FB 100
Quality	06	Quality Level 06
DOR CODE	0100	SINGLE FAMILY
MAP NUM		MKT AREA 01
NEIGHBORHOOD/LOC	1057.00	

AREA TYPE	TOTAL GROSS AREA	PCT OF BASE	TOT ADJ AREA	SUBAREA MARKET VALUE
BAL	280	15	42	4,800
BAS	1,119	100	1,119	127,889
BAS	580	100	580	66,287
DCK	184	10	18	2,057
FOP	25	30	8	914
FOP	135	30	40	4,571
FOP	230	30	69	7,886
FOP	452	30	136	15,544
FUS	1,142	100	1,142	130,518
FUS	580	100	580	66,287
TOTALS	4,727		3,734	426,754

MARKET ADJUSTMENTS

TYPE	MDL	EFF. AREA	TOT ADJ PTS	EFF. BASE RATE	REPL. COST NEW	AYB	EYB	ECON	FNCT		NORM	% COND
0500	11	3,734	100.2510	150.38	561,519	1925	1990	0	0	0	24.00	76.00

1 SFR CUST – 0% - 0 Heated Area: 3421 HX Base Yr

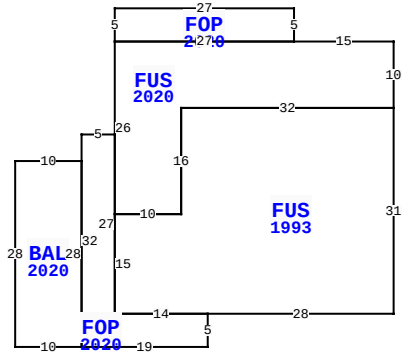

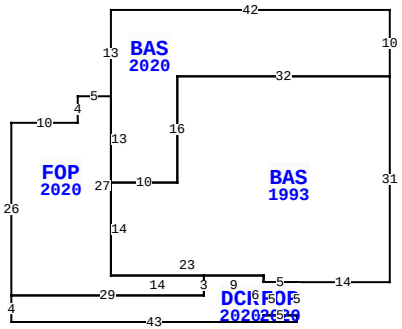

583 S FLETCHER AVE, FERNANDINA BEACH

BLD DATE		LGL DATE	
XF DATE		LAND DATE	03/20/2024 MLU
INC DATE		AG DATE	

NASSAU COUNTY PROPERTY — VALUATION SUMMARY

VALUATION BY	STANDARD
Tax Group: 2	Tax Dist:
BUILDING MARKET VALUE	426,754
TOTAL MARKET OB/XF VALUE	2,269
TOTAL LAND VALUE - MARKET	408,000
TOTAL MARKET VALUE	837,023
SOH/AGL Deduction	0
ASSESSED VALUE	837,023
TOTAL EXEMPTION VALUE	0
BASE TAXABLE VALUE	837,023
TOTAL JUST VALUE	837,023
NCON VALUE	0
INCOME VALUE	
PREVIOUS YEAR MKT VALUE	792,940

PERMIT NUM	DESCRIPTION	AMT	ISSUED
20190397	REMODEL	0	06/21/2019
20131646	REPAIR/RRF	8,000	07/12/2013
20122086	CHNGE SRVC	800	10/10/2012
20080133	H/AC	3,200	01/30/2008
20041922	REPAIR/RRF	3,000	10/20/2004

SALES DATA

OFF RECORD Number	DATE	TYPE INST	Q U	V I	RSN CD	SALE PRICE
1989/0045	7/01/2015	WD	Q	I	01	535,000
GRANTOR: GRANT MARY PAMELA ET						
GRANTEE: REGISTER GARY E & J						
1929/0094	7/23/2014	FJ	U	I	11	0
GRANTOR: TURBOT CORA MAC ESTAT						
GRANTEE: GRANT MARY PAMELA E						

BUILDING NOTES

BUILDING DIMENSIONS

BAS=[YR=2020] W42 S13 FOP=[YR=2020] W5 S4 W10 S26
DCK=[YR=2020] S4 E43 N1 FOP=[YR=2020] N5BAS=[YR=1993] E14
N31 W32 S16 W10 S14 E23 S1 E5 $ W5 S5 E5 $W5 N6 W9 S3 W29 $
E29 N3 W14 N27$ S13E10 N16E32 N10$ PTR= E10 BAL=[YR=2020]
E10 FOP=[YR=2020] E19 N5 FUS=[YR=1993] E28 N31 FUS=[YR=2020]
N10 W15 FOP=[YR=2020] N5 W27 S5 E27 $ W27 S26 E10 N16 E32 $
W32 S16 W10 S15 E14 $ W14 N27 W5 S32 $ N28 W10 S28 $ W10 $.

EXTRA FEATURES

LN	OB/XF CODE	DESCRIPTION	BLD	CAP	L	W	UNITS	UT	Adj R	ADJ UNIT PRICE	ORIG COND	YEAR ON	YEAR ACTUAL	Q	% COND	OB/XF MKT VALUE	NOTES
1	0810	CONCRETE A	0	0	0	0	1,304.00	SF	6.50	6.50	100	1974	1974	3	25	2,119	
2	0810	CONCRETE A	0	0	23	4	92.00	SF	6.50	6.50	100	1974	1974	3	25	150	

LAND DESCRIPTION

TOTAL OB/XF 2,269

LN	USE CODE	CLS	LAND USE DESCRIPTION	CAP	RD	LOC ZONE	FRONT	DEPTH	TOT LND UTS	UNIT TYPE	DT	DPTH FACT	% COND	TOT ADJ	UNIT PRICE	ADJ UNIT PRICE	LAND VALUE	OTHER ADJUSTMENTS AND NOTES	YEAR	DENSITY	DECL	FRZ	YR	CONSRV
1	000100	C	SFR	0	0006	R-3	75.00	112.00	75.00	FF		1.00	1.00	0.85	6,400.00	5,440.00	408,000							

REVIEW DATE 04/06/2021 BY RK Total Acres: 0.00 Total Land Value: 408,000 Market: 0 Agricultural: 0 Common: 408,000 PRINTED 08/06/2024 BY SYS