BLOCK 2 LOT 6
OCEAN CITY NORTH PORTION R/P
PBK 2/38

JONES FAMILY TRUST/JONES STEVE C TRUSTEE
PO BOX 16903
FERNANDINA BEACH, FL 32035

2024

00-00-31-1520-0002-0060

NASSAU COUNTY PROPERTY

BUILDING CHARACTERISTICS

ELEMENT	CD	CONSTRUCTION
Exterior Wall	31	HARDIE BRD 70
Exterior Wall	17	CB STUCCO 30
Roof Structur	03	GABLE/HIP 100
Roof Cover	13	STAND SEAM 100
Interior Wall	05	DRYWALL 100
Interior Floo	13	LVT/LAMNT 70
Interior Floo	11	CLAY TILE 30
Air Condition	03	CENTRAL 100
Heating Type	04	AIR DUCTED 100
Bedrooms		8 100
Bathrooms		6 100
Frame	03	MASONRY 100
Stories	3.	3. 100
Units		4 100
Quality	05	Quality Level 05

DOR CODE	0800	MULTI-FAMILY	
MAP NUM		MKT AREA	01
NEIGHBORHOOD/LOC	1057.00		

AREA TYPE	TOTAL GROSS AREA	PCT OF BASE	TOT ADJ AREA	SUBAREA MARKET VALUE
BAS	90	100	90	17,024
BAS	141	100	141	26,670
BAS	219	100	219	41,424
FCP	2,162	25	540	102,141
FGR	534	55	294	55,610
FOP	132	30	40	7,566
FOP	160	30	48	9,079
FOP	160	30	48	9,079
FOP	320	30	96	18,158
FOP	452	30	136	25,724
TOTALS	10,438		7,462	1,411,437

MARKET ADJUSTMENTS

TYPE	MDL	EFF. AREA	TOT ADJ PTS	EFF. BASE RATE	REPL. COST NEW	AYB	EYB	ECON	FNCT		NORM	% COND
2801	11	7,462	157.6240	189.15	1,411,437	2023	2023	0	0	0	0.00	100.00

1 QUAD PLEX - 0% - 2024 Heated Area: 5946 HX Base Yr

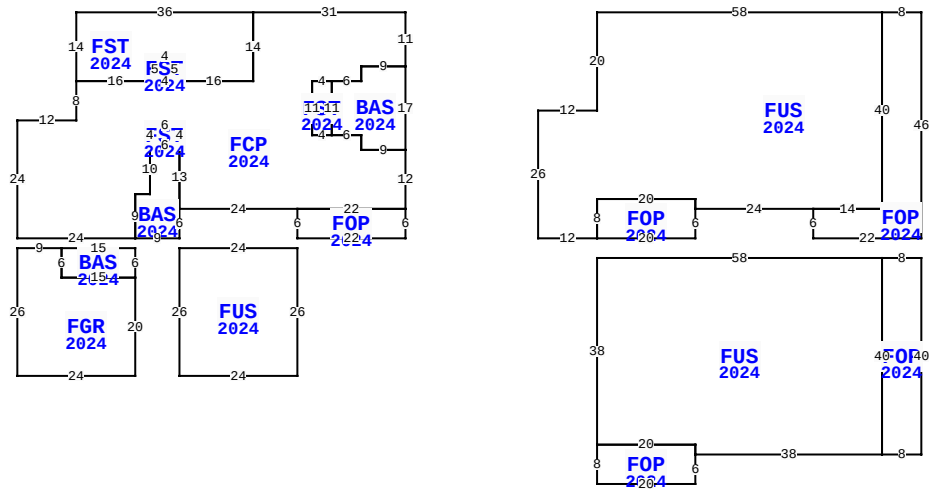

** This building has 17 Sub-Areas

391 S FLETCHER AVE, FERNANDINA BEACH

BLD DATE		LGL DATE	
XF DATE		LAND DATE	03/20/2024 MLU
INC DATE		AG DATE	

VALUATION SUMMARY

VALUATION BY	STANDARD
Tax Group: 2	Tax Dist:
BUILDING MARKET VALUE	1,411,437
TOTAL MARKET OB/XF VALUE	83,188
TOTAL LAND VALUE - MARKET	424,320
TOTAL MARKET VALUE	1,918,945
SOH/AGL Deduction	0
ASSESSED VALUE	1,918,945
TOTAL EXEMPTION VALUE	0
BASE TAXABLE VALUE	1,918,945
TOTAL JUST VALUE	1,918,945
NCON VALUE	1,494,625
INCOME VALUE	
PREVIOUS YEAR MKT VALUE	397,800

PERMIT NUM	DESCRIPTION	AMT	ISSUED
20211540	CO		06/15/2023
20211540	NEW CONSTR	0	11/29/2021
20120090	DEMOLITION OF BLD	11,135	01/18/2012
20010169	CHG METER CAN	500	02/05/2001
8482	REPAIR/RRF	800	08/10/1994

SALES DATA

OFF RECORD Number	DATE	TYPE INST	Q / U	V / I	RSN CD	SALE PRICE
2397/0337	9/30/2020	WD	Q	I	01	400,000
GRANTOR: TA VISTA HOMES LLC						
GRANTEE: JONES FAMILY TRUST						
1861/0672	6/07/2013	SW	U	I	11	100
GRANTOR: FIRST FEDERAL BANK OF						
GRANTEE: TA VISTA HOMES LLC						

BUILDING NOTES

BUILDING DIMENSIONS

FCP=[YR=2024;ORIG=61,0] W31 S14 W16 W4 W16 S8 W12 S24 E24 N9 E3 N10 N4 E6 S4 S13 E24 E22 N12 W9 N3 W6 W4 N11 E4 E6 N3 E9 N11 $
FST=[YR=2024;ORIG=42,14] S11 E4 N11 W4 $
BAS=[YR=2024;ORIG=61,11] W9 S3 W6 S11 E6 S3 E9 N17 $
FST=[YR=2024;ORIG=-6,0] E36 S14 W16 N5 W4 S5 W16 N14 $
FST=[YR=2024;ORIG=14,9] W4 S5 E4 N5 $
FST=[YR=2024;ORIG=9,23] E6 S4 W6 N4 $
BAS=[YR=2024;ORIG=9,27] E6 S13 S6 W9 N9 E3 N10 $
FOP=[YR=2024;ORIG=39,40] E22 S6 W22 N6 $
FGR=[YR=2024;ORIG=-18,48] S26 E24 N20 W15 N6 W9 $
BAS=[YR=2024;ORIG=-9,48] S6 E15 N6 W15 $

EXTRA FEATURES

LN	OB/XF CODE	DESCRIPTION	BLD	CAP	L	W	UNITS	UT	Adj R	ADJ UNIT PRICE	ORIG COND	YEAR ON	YEAR ACTUAL	Q	% COND	OB/XF MKT VALUE	NOTES
1	0855	CONC PAVER	0	0	0	0	6,646.00	SF	10.00	10.00	100	2024	2023		100	66,460	
2	0476	VF 6 SBPL	0	0	0	0	204.00	LF	32.00	32.00	100	2024	2023		100	6,528	
3	0409	ELEVATOR R	0	0	0	0	1.00	UT	10,200.00	10,200.00	100	2024	2023		100	10,200	

LAND DESCRIPTION

TOTAL OB/XF 83,188

LN	USE CODE	CLS	LAND USE DESCRIPTION	CAP	RD	LOC ZONE	FRONT	DEPTH	TOT LND UTS	UNIT TYPE	DT	DPTH FACT	% COND	TOT ADJ	UNIT PRICE	ADJ UNIT PRICE	LAND VALUE	OTHER ADJUSTMENTS AND NOTES	YEAR	DENSITY	DECL	FRZ	YR	CONSRV
1	000800	C	MULTI-FAM	0	0006	R-3	75.00	146.00	75.00	FF		1.00	1.00	0.88	6,400.00	5,657.60	424,320							

REVIEW DATE 02/13/2024 BY DJ Total Acres: 0.00 Total Land Value: 424,320 Market: 0 Agricultural: 0 Common: 424,320 PRINTED 08/06/2024 BY SYS