BLOCK 6 LOT 18
IN OR 1889/233
OAK LAWN PARK 5 PB 3/39

SMITH KEITH D
506 S 15TH STREET
FERNANDINA BEACH, FL 32034

2024

00-00-31-150E-0006-0180

BUILDING CHARACTERISTICS

ELEMENT	CD	CONSTRUCTION
Exterior Wall	15	CONC BLOCK 100
Roof Structur	03	GABLE/HIP 100
Roof Cover	03	COMP SHNGL 100
Interior Wall	03	PLASTER 100
Interior Floo	14	CARPET 80
Interior Floo	12	HARDWOOD 20
Air Condition	03	CENTRAL 100
Heating Type	04	AIR DUCTED 100
Bedrooms		3 100
Bathrooms		1 100
Frame	03	MASONRY 100
Stories	1.	1. 100
Units		0 100
BUD8 Adjustme	02	DIST FB 100
Occupancy	00	NONE 100
Quality	03	Quality Level 03
DOR CODE	0100	SINGLE FAMILY
MAP NUM		MKT AREA 01
NEIGHBORHOOD/LOC	1011.00	

AREA TYPE	TOTAL GROSS AREA	PCT OF BASE	TOT ADJ AREA	SUBAREA MARKET VALUE
BAS	1,064	100	1,064	72,284
FCP	200	25	50	3,397
FOP	56	30	17	1,155
FOP	88	30	26	1,767
TOTALS	1,408		1,157	78,603

MARKET ADJUSTMENTS

TYPE	MDL	EFF. AREA	TOT ADJ PTS	EFF. BASE RATE	REPL. COST NEW	AYB	EYB	ECON	FNCT		NORM	% COND
0100	01	1,157	109.1800	103.72	120,004	1959	1959	0	0	0	34.50	65.50

1 SINGLE FAM – 100% - 2016 Heated Area: 1064 HX Base Yr 2016

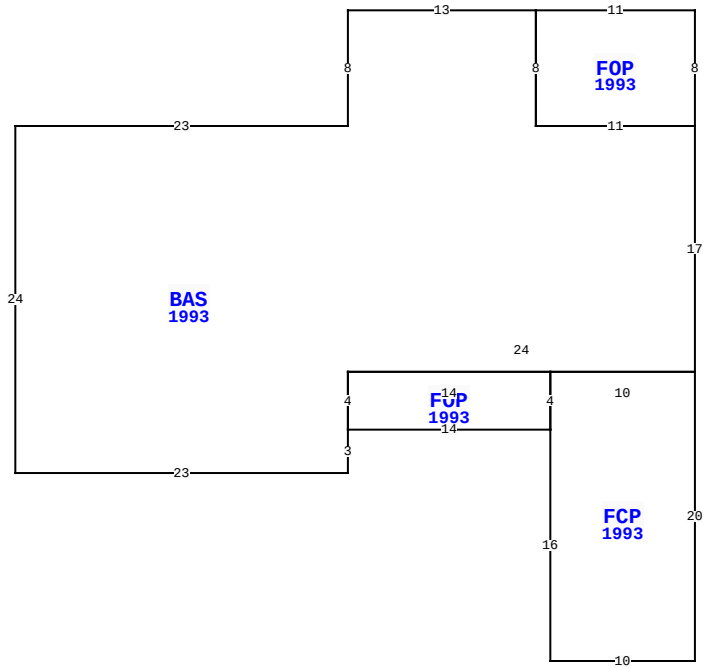

506 S 15TH ST, FERNANDINA BEACH

BLD DATE		LGL DATE	
XF DATE		LAND DATE	03/18/2024 MLU
INC DATE		AG DATE	

NASSAU COUNTY PROPERTY

PAGE 1 of 1 2

VALUATION SUMMARY

VALUATION BY		STANDARD
Tax Group: 2	Tax Dist:	
BUILDING MARKET VALUE		78,603
TOTAL MARKET OB/XF VALUE		3,489
TOTAL LAND VALUE - MARKET		151,360
TOTAL MARKET VALUE		233,452
SOH/AGL Deduction		140,797
ASSESSED VALUE		92,655
TOTAL EXEMPTION VALUE	HX HB	50,000
BASE TAXABLE VALUE		42,655
TOTAL JUST VALUE		233,452
NCON VALUE		0
INCOME VALUE		
PREVIOUS YEAR MKT VALUE		216,043

PERMIT NUM	DESCRIPTION	AMT	ISSUED

SALES DATA

OFF RECORD Number	DATE	TYPE INST	Q U /	V I /	RSN CD	SALE PRICE
2565/1751	5/26/2022	QC	U	I	11	100
GRANTOR: SMITH GLENDA KAY						
GRANTEE: SMITH KEITH D						
1889/0233	4/29/2013	WD	U	I	11	100
GRANTOR: ROWE DONALD E						
GRANTEE: SMITH KEITH D & GLE						

BUILDING NOTES

BUILDING DIMENSIONS

FOP=[YR=1993] W11 BAS=[YR=1993] W13 S8 W23 S24 E23 N3
FOP=[YR=1993] E14 FCP=[YR=1993] S16 E10 N20 W10 S4 $ N4 W14
S4 $ N4 E24 N17 W11 N8 $ S8 E11 N8 $.

EXTRA FEATURES

LN	OB/XF CODE	DESCRIPTION	BLD	CAP	L	W	UNITS	UT	Adj R	ADJ UNIT PRICE	ORIG COND	YEAR ON	YEAR ACTUAL	Q	% COND	OB/XF MKT VALUE	NOTES
1	0810	CONCRETE A	0	100	47	8	376.00	SF	6.50	6.50	100	1960	1960	3	20	489	
2	0511	GARAGE CB-	0	100	25	15	375.00	SF	40.00	40.00	100	1959	1959	3	20	3,000	

LAND DESCRIPTION

TOTAL OB/XF 3,489

LN	USE CODE	CLS	LAND USE DESCRIPTION	CAP	RD	LOC ZONE	FRONT	DEPTH	TOT LND UTS	UNIT TYPE	DT	DPTH FACT	% COND	TOT ADJ	UNIT PRICE	ADJ UNIT PRICE	LAND VALUE	OTHER ADJUSTMENTS AND NOTES	YEAR	DENSITY	DECL	FRZ	YR	CONSRV
1	000100	C	SFR	100	0006	R-1	86.00	150.00	86.00	FF		1.00	1.00	0.80	2,200.00	1,760.00	151,360							

REVIEW DATE 05/12/2019 BY KBA Total Acres: 0.00 Total Land Value: 151,360 Market: 0 Agricultural: 0 Common: 151,360 PRINTED 08/06/2024 BY SYS