LOT 16
NATURES GATE PB 5/200

SHARPE ZACHARY S & RACHEL
2170 NATURES GATE CT SOUTH
FERNANDINA BEACH, FL 32034

2024

00-00-31-147G-0016-0000

BUILDING CHARACTERISTICS

ELEMENT	CD	CONSTRUCTION
Exterior Wall	16	WD FR STUC 100
Roof Structur	08	IRREGULAR 100
Roof Cover	03	COMP SHNGL 100
Interior Wall	05	DRYWALL 100
Interior Floo	14	CARPET 80
Interior Floo	08	SHT VINYL 20
Air Condition	03	CENTRAL 100
Heating Type	04	AIR DUCTED 100
Bedrooms		4 100
Bathrooms		2 100
Frame	02	WOOD FRAME 100
Stories	1.	1. 100
Units		0 100
Occupancy	00	NONE 100
Quality	05	Quality Level 05
DOR CODE	0100	SINGLE FAMILY
MAP NUM		MKT AREA 01
NEIGHBORHOOD/LOC	1030.00	

AREA TYPE	TOTAL GROSS AREA	PCT OF BASE	TOT ADJ AREA	SUBAREA MARKET VALUE
BAS	2,054	100	2,054	251,913
FGR	462	55	254	31,152
FOP	36	30	11	1,349
FSP	161	40	64	7,849
UOP	8	20	2	245
TOTALS	2,721		2,385	292,508

MARKET ADJUSTMENTS

TYPE	MDL	EFF. AREA	TOT ADJ PTS	EFF. BASE RATE	REPL. COST NEW	AYB	EYB	ECON	FNCT		NORM	% COND
0900	01	2,385	117.5020	146.88	350,309	1990	1990	0	0	0	16.50	83.50

1 SNGL FAM – 100% - 2023 Heated Area: 2054 HX Base Yr 2023

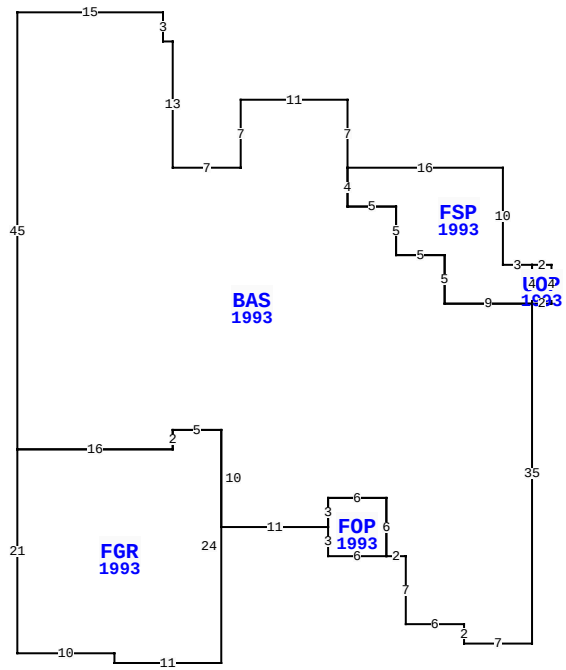

2170 S NATURES GATE CT, FERNANDINA BEACH

BLD DATE		LGL DATE	
XF DATE		LAND DATE	03/19/2024 MLU
INC DATE		AG DATE	

NASSAU COUNTY PROPERTY

PAGE 1 of 1 2

VALUATION SUMMARY

VALUATION BY		STANDARD
Tax Group: 2	Tax Dist:	
BUILDING MARKET VALUE		292,508
TOTAL MARKET OB/XF VALUE		5,097
TOTAL LAND VALUE - MARKET		180,000
TOTAL MARKET VALUE		477,605
SOH/AGL Deduction		100,850
ASSESSED VALUE		376,755
TOTAL EXEMPTION VALUE	HX HB	50,000
BASE TAXABLE VALUE		326,755
TOTAL JUST VALUE		477,605
NCON VALUE		0
INCOME VALUE		
PREVIOUS YEAR MKT VALUE		422,815

PERMIT NUM	DESCRIPTION	AMT	ISSUED
20070461	XFOB	7,712	03/15/2007
20060016	REPAIR/RRF	10,300	01/04/2006
6763	ADDITION	6,000	10/08/1991
5858	NEW CONSTR	87,570	03/14/1990

SALES DATA

OFF RECORD Number	DATE	TYPE INST	Q U /	V I /	RSN CD	SALE PRICE
2561/0493	5/02/2022	TD	Q	I	01	610,000
GRANTOR: ADAMS FAMILY TRUST						
GRANTEE: SHARPE ZACHARY A &						
2457/0776	4/28/2021	WD	Q	I	01	480,000
GRANTOR: NOE CHRISTOPHER D & J						
GRANTEE: ADAMS FAMILY TRUST						

BUILDING NOTES

BUILDING DIMENSIONS

UOP=[YR=1993] W2 FSP=[YR=1993] W3 N10 W16 BAS=[YR=1993] N7 W11 S7 W7 N13 W1 N3 W15 S45 FGR=[YR=1993] S21 E10 S1 E11 N24 W5 S2 W16$ E16 N2 E5 S10 E11 FOP=[YR=1993] S3 E6 N6 W6 S3$ N3 E6 S6 E2 S7 E6 S2 E7 N35 W9 N5 W5 N5 W5 N4$ S4 E5 S5 E5 S5 E9 N4$ S4 E2 N4$.

EXTRA FEATURES

LN	OB/XF CODE	DESCRIPTION	BLD	CAP	L	W	UNITS	UT	Adj R	ADJ UNIT PRICE	ORIG COND	YEAR ON	YEAR ACTUAL	Q	% COND	OB/XF MKT VALUE	NOTES
1	0500	FP-PRE FAB	0	100	0	0	1.00	UT	3,500.00	3,500.00	100	1990	1990	3	68	2,380	
2	0811	CONCRETE B	0	100	0	0	878.00	SF	5.20	5.20	100	1990	1990	3	59.5	2,717	

LAND DESCRIPTION

TOTAL OB/XF 5,097

LN	USE CODE	CLS	LAND USE DESCRIPTION	CAP	RD	LOC ZONE	FRONT	DEPTH	TOT LND UTS	UNIT TYPE	DT	DPTH FACT	% COND	TOT ADJ	UNIT PRICE	ADJ UNIT PRICE	LAND VALUE	OTHER ADJUSTMENTS AND NOTES	YEAR	DENSITY	DECL	FRZ	YR	CONSRV
1	000100	C	SFR	100		R-1	0.00	0.00	1.00	UT		1.00	1.00	1.20	150,000.00	180,000.00	180,000							

REVIEW DATE 05/12/2019 BY KBA Total Acres: 0.00 Total Land Value: 180,000 Market: 0 Agricultural: 0 Common: 180,000 PRINTED 08/06/2024 BY SYS