N 45 FT OF LOT 21 S30' OF 20
MIRAMAR BEACH PB 2/61

**MURPHY LEIF & PAULA**
5129 ANNESWAY DRIVE
NASHVILLE, TN 37205

# 2024

**00-00-31-1460-0021-0010**

## BUILDING CHARACTERISTICS

| ELEMENT | CD | CONSTRUCTION |
|---|---|---|
| Exterior Wall | 11 | BD/BTN AVG 50 |
| Exterior Wall | 23 | REINF CONC 50 |
| Roof Structur | 03 | GABLE/HIP 100 |
| Roof Cover | 03 | COMP SHNGL 100 |
| Interior Wall | 05 | DRYWALL 100 |
| Interior Floo | 11 | CLAY TILE 50 |
| Interior Floo | 14 | CARPET 50 |
| Air Condition | 03 | CENTRAL 100 |
| Heating Type | 04 | AIR DUCTED 100 |
| Bedrooms | | 3 100 |
| Bathrooms | | 2 100 |
| Frame | 07 | SPECIAL 100 |
| Stories | 2. | 2. 100 |
| Units | | 0 100 |
| BUD8 Adjustme | 02 | DIST FB 100 |
| Occupancy | 00 | NONE 100 |
| Quality | 04 | Quality Level 04 |
| DOR CODE | 0100 | SINGLE FAMILY |
| MAP NUM | | MKT AREA 01 |
| NEIGHBORHOOD/LOC | 1051.00 | |

| AREA TYPE | TOTAL GROSS AREA | PCT OF BASE | TOT ADJ AREA | SUBAREA MARKET VALUE |
|---|---|---|---|---|
| BAL | 20 | 15 | 3 | 418 |
| BAS | 862 | 100 | 862 | 119,943 |
| FGR | 750 | 55 | 412 | 57,328 |
| FOP | 40 | 30 | 12 | 1,670 |
| FOP | 245 | 30 | 74 | 10,296 |
| FUS | 1,715 | 100 | 1,715 | 238,633 |
| PTO | 532 | 5 | 27 | 3,757 |
| STR | 52 | 10 | 5 | 696 |
| UOP | 216 | 20 | 43 | 5,984 |
| UST | 16 | 45 | 7 | 974 |
| TOTALS | 4,448 | | 3,160 | 439,696 |

## MARKET ADJUSTMENTS

| TYPE | MDL | EFF. AREA | TOT ADJ PTS | EFF. BASE RATE | REPL. COST NEW | AYB | EYB | ECON | FNCT | | NORM | % COND |
|---|---|---|---|---|---|---|---|---|---|---|---|---|
| 0500 | 01 | 3,160 | 111.0900 | 166.64 | 526,582 | 1972 | 1990 | 0 | 0 | 0 | 16.50 | 83.50 |

1 SFR CUST – 0% - 2024 Heated Area: 2577 HX Base Yr

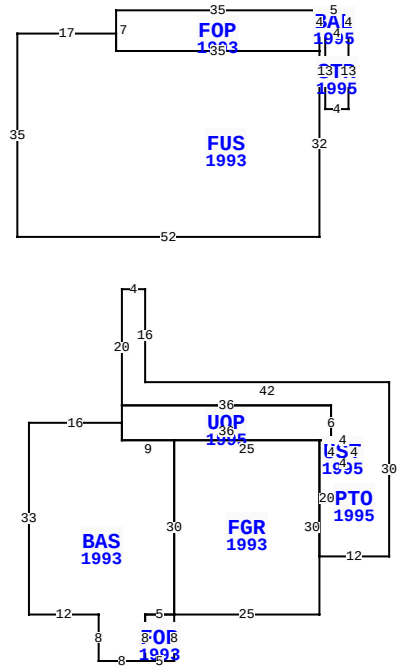


1628 S FLETCHER AVE, FERNANDINA BEACH

| | | | |
|---|---|---|---|
| BLD DATE | | LGL DATE | |
| XF DATE | | LAND DATE | 05/07/2024 MLU |
| INC DATE | | AG DATE | |

## NASSAU COUNTY PROPERTY

PAGE 1 of 1 2

### VALUATION SUMMARY

| | |
|---|---|
| VALUATION BY | STANDARD |
| Tax Group: 2 | Tax Dist: |
| BUILDING MARKET VALUE | 439,696 |
| TOTAL MARKET OB/XF VALUE | 26,173 |
| TOTAL LAND VALUE - MARKET | 1,237,500 |
| TOTAL MARKET VALUE | 1,703,369 |
| SOH/AGL Deduction | 0 |
| ASSESSED VALUE | 1,703,369 |
| TOTAL EXEMPTION VALUE | 0 |
| BASE TAXABLE VALUE | 1,703,369 |
| TOTAL JUST VALUE | 1,703,369 |
| NCON VALUE | 0 |
| INCOME VALUE | |
| PREVIOUS YEAR MKT VALUE | 1,571,476 |

| PERMIT NUM | DESCRIPTION | AMT | ISSUED |
|---|---|---|---|
| 2023-0767 | REMODEL | 448,000 | 12/27/2023 |
| 20110770 | H/AC | 3,500 | 05/19/2011 |
| 959419 | REMODEL | 3,100 | 11/09/1995 |

## SALES DATA

| OFF RECORD Number | DATE | TYPE INST | Q U | V I | RSN CD | SALE PRICE |
|---|---|---|---|---|---|---|
| 2665/1489 | 9/07/2023 | WD | U | I | 11 | 100 |
| GRANTOR: HUNTLEY THOMAS B | | | | | | |
| GRANTEE: MURPHY LEIF & PAULA | | | | | | |
| 2653/880 | 7/11/2023 | WD | U | I | 11 | 100 |
| GRANTOR: BRADDOCK THOMAS H JR | | | | | | |
| GRANTEE: HUNTLEY THOMAS B | | | | | | |

## BUILDING NOTES

## BUILDING DIMENSIONS

PTO=[YR=1995] W42N16W4S20 UOP=[YR=1995] S3 BAS=[YR=1993] W16S33E12 S8E8 FOP=[YR=1993] E5N8W5S8$ N8E5 FGR=[YR=1993] E25 N30W25S30$ N30W9N3 $ S3E36 UST=[YR=1995] S4E4N4W4$ N6 W36$ E36S6 E4S4W4N4W2 S20E12 N30$ PTR=W12N25 FUS=[YR=1993] N32 FOP=[YR=1993] N3 BAL=[YR=1995] E1 STR=[YR=1995] S13E4N13W4$ E4N4W5S4$ N4W35S7 E35$ W35N3 W17S35E52$ S25E12$.

## EXTRA FEATURES

| LN | OB/XF CODE | DESCRIPTION | BLD | CAP | L | W | UNITS | UT | Adj R | ADJ UNIT PRICE | ORIG COND | YEAR ON | YEAR ACTUAL | Q | % COND | OB/XF MKT VALUE | NOTES |
|---|---|---|---|---|---|---|---|---|---|---|---|---|---|---|---|---|---|
| 1 | 0858 | SCULP CONC | 0 | 0 | 0 | 0 | 1,670.00 | SF | 13.00 | 13.00 | 100 | 2011 | 2011 | 3 | 98 | 21,276 | |
| 2 | 0858 | SCULP CONC | 0 | 0 | 18 | 3 | 54.00 | SF | 13.00 | 13.00 | 100 | 2011 | 2011 | 3 | 98 | 688 | |
| 3 | 1241 | WD DECK G | 0 | 0 | 16 | 10 | 160.00 | UT | 17.25 | 17.25 | 100 | 2011 | 2011 | 3 | 64 | 1,766 | |
| 4 | 0416 | DUNEWALKS | 0 | 0 | 0 | 0 | 364.00 | SF | 15.00 | 15.00 | 100 | 1995 | 1995 | 3 | 20 | 1,092 | |
| 5 | 1127 | BRICK 8" | 0 | 0 | 0 | 0 | 135.00 | SF | 11.00 | 11.00 | 100 | 1995 | 1995 | 3 | 91 | 1,351 | |

## LAND DESCRIPTION

TOTAL OB/XF 26,173

| LN | USE CODE | CLS | LAND USE DESCRIPTION | CAP | RD | LOC ZONE | FRONT | DEPTH | TOT LND UTS | UNIT TYPE | DT | DPTH FACT | % COND | TOT ADJ | UNIT PRICE | ADJ UNIT PRICE | LAND VALUE | OTHER ADJUSTMENTS AND NOTES | YEAR | DENSITY | DECL | FRZ | YR | CONSRV |
|---|---|---|---|---|---|---|---|---|---|---|---|---|---|---|---|---|---|---|---|---|---|---|---|---|
| 1 | 000120 | C | SFR OCN FT | 0 | 0006 | R-1 | 75.00 | 150.00 | 75.00 | FF | | 1.00 | 1.00 | 1.00 | 16,500.00 | 16,500.00 | 1,237,500 | | | | | | | |

REVIEW DATE 07/09/2024 BY DJ Total Acres: 0.00 Total Land Value: 1,237,500 Market: 0 Agricultural: 0 Common: 1,237,500 PRINTED 08/06/2024 BY SYS