N60 FT OF LOT 18
MIRAMAR BEACH PB 2/61

LALOLA RIVA LLC
202 W GORHAM ST
MADISON, WI 53703

2024

00-00-31-1460-0018-0010

BUILDING CHARACTERISTICS

ELEMENT	CD	CONSTRUCTION
Exterior Wall	10	ABOVE AVG 100
Roof Structur	08	IRREGULAR 100
Roof Cover	11	SLATE 100
Interior Wall	05	DRYWALL 100
Interior Floo	12	HARDWOOD 70
Interior Floo	11	CLAY TILE 30
Air Condition	03	CENTRAL 100
Heating Type	04	AIR DUCTED 100
Bedrooms		4 100
Bathrooms		3 100
Frame	02	WOOD FRAME 100
Stories	3.	3. 100
Units		0 100
Quality	05	Quality Level 05
DOR CODE	0100	SINGLE FAMILY
MAP NUM		MKT AREA 01
NEIGHBORHOOD/LOC	1051.00	

AREA TYPE	TOTAL GROSS AREA	PCT OF BASE	TOT ADJ AREA	SUBAREA MARKET VALUE
BAL	245	15	37	23,667
BAS	684	100	684	437,526
FGR	482	55	265	169,510
FOP	60	30	18	11,514
FST	24	55	13	8,316
FUS	1,034	100	1,034	661,407
FUS	1,074	100	1,074	686,993
STR	44	10	4	2,558
STR	48	10	5	3,198
STR	48	10	5	3,198
TOTALS	4,506		3,286	2,101,918

MARKET ADJUSTMENTS

TYPE	MDL	EFF. AREA	TOT ADJ PTS	EFF. BASE RATE	REPL. COST NEW	AYB	EYB	ECON	FNCT		NORM	% COND
0500	22	3,286	437.3766	656.06	2,155,813	2017	2017	0	0	0	2.50	97.50

2 SFR CUST – 0% - 2023 Heated Area: 2792 HX Base Yr

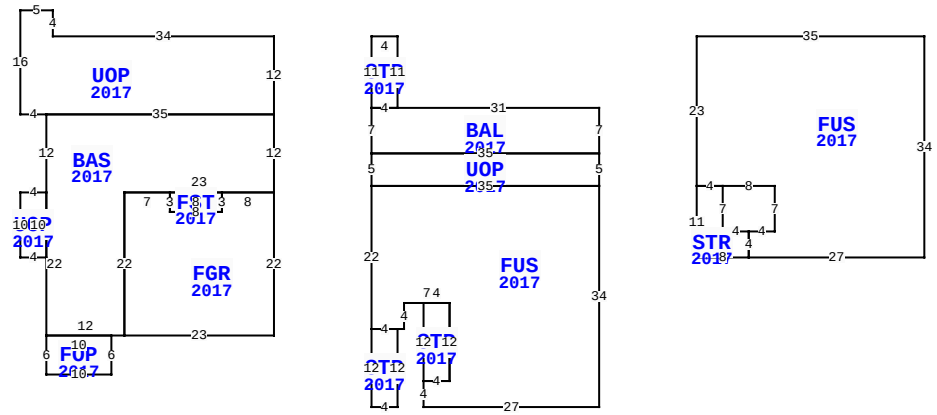

** This building has 14 Sub-Areas

1554 S FLETCHER AVE, FERNANDINA BEACH

BLD DATE		LGL DATE	
XF DATE		LAND DATE	05/07/2024 MLU
INC DATE		AG DATE	

NASSAU COUNTY PROPERTY

PAGE 1 of 1 2

VALUATION SUMMARY

VALUATION BY	STANDARD
Tax Group: 2	Tax Dist:
BUILDING MARKET VALUE	2,101,918
TOTAL MARKET OB/XF VALUE	23,113
TOTAL LAND VALUE - MARKET	990,000
TOTAL MARKET VALUE	3,115,031
SOH/AGL Deduction	16,914
ASSESSED VALUE	3,098,117
TOTAL EXEMPTION VALUE	0
BASE TAXABLE VALUE	3,098,117
TOTAL JUST VALUE	3,115,031
NCON VALUE	0
INCOME VALUE	
PREVIOUS YEAR MKT VALUE	2,816,470

PERMIT NUM	DESCRIPTION	AMT	ISSUED
2023-0142	RMDL BATH KITCHEN	52,000	03/20/2023
20162319	CO ISSUED	0	03/29/2017
20162319	NEW CONSTR	325,356	08/22/2016
20160626	DEMO G/HSE	8,000	03/09/2016
20110109	REPLACE TREADS/CA	450	01/24/2011
20020752	VINYL SOFFIT/FASC	2,000	04/30/2002

SALES DATA

OFF RECORD Number	DATE	TYPE INST	Q / U	V / I	RSN CD	SALE PRICE
2596/1786	10/17/2022	WD	Q	I	01	3,900,000
GRANTOR: ROBERTS THOMAS H III						
GRANTEE: LALOLA RIVA LLC						
2019/0188	12/16/2015	WD	Q	I	01	1,000,000
GRANTOR: SMOAK STEVE C						
GRANTEE: ROBERTS THOMAS HUGH						

BUILDING NOTES

BUILDING DIMENSIONS

UOP=[YR=2017] W34 N4 W5 S16 E4 BAS=[YR=2017] S12 UOP=[YR=2017] W4 S10 E4 N10$ S22 FOP=[YR=2017] S6 E10 N6 W10 $ E12 FGR=[YR=2017] E23 N22 W8 FST=[YR=2017] W8 S3 E8 N3$ S3 W8 N3 W7 S22$ N22 E23 N12 W35$ E35 N12$ PTR=E15 STR=[YR=2017] E4 S11 BAL=[YR=2017] E31 S7 UOP=[YR=2017] S5 FUS=[YR=2017] S34 W27 N4 STR=[YR=2017] N12 E4 S12 W4$ E4 N12 W7 S4 W1 STR=[YR=2017] S12 W4 N12 E4$ W4 N22 E35$ W35 N5 E35$ W35 N7 E4$ W4 N11$ W15$ PTR=E65 FUS=[YR=2017] E35 S34 W27 N4 E4 N7 W8 STR=[YR=2017] S7 E4 S4 W8 N11 E4$ W4 N23$ W65$.

EXTRA FEATURES

L N	OB/XF CODE	DESCRIPTION	BLD	CAP	L	W	UNITS	UT	Adj R	ADJ UNIT PRICE	ORIG COND	YEAR ON	YEAR ACTUAL	Q	% COND	OB/XF MKT VALUE	NOTES
1	0855	CONC PAVER	0	0	0	0	1,466.00	SF	7.00	7.00	100	2017	2017	3	97	9,954	
2	0855	CONC PAVER	0	0	0	0	151.00	SF	7.00	7.00	100	2017	2017	3	97	1,025	
3	0462	ST/AL FNC	0	0	0	0	656.00	SF	10.00	10.00	100	2017	2017	3	84	5,510	
4	0855	CONC PAVER	0	0	0	0	66.00	SF	10.00	10.00	100	2017	2017	3	97	640	
5	0810	CONCRETE A	0	0	6	5	30.00	SF	6.50	6.50	100	2017	2017	3	97	189	
6	1127	BRICK 8"	0	0	0	0	10.00	SF	11.00	11.00	100	2017	2017	3	99	109	
7	0416	DUNEWALKS	0	0	65	4	248.00	SF	30.00	30.00	100	2011	2011	3	50	3,720	
8	0416	DUNEWALKS	0	0	0	0	84.00	SF	30.00	30.00	100	2017	2017	3	78	1,966	

LAND DESCRIPTION

TOTAL OB/XF 23,113

L N	USE CODE	CLS	LAND USE DESCRIPTION	CAP	R D	LOC ZONE	FRONT	DEPTH	TOT LND UTS	UNIT TYPE	D T	DPTH FACT	% COND	TOT ADJ	UNIT PRICE	ADJ UNIT PRICE	LAND VALUE	OTHER ADJUSTMENTS AND NOTES	YEAR	DENSITY	DECL	FRZ	YR	CONSRV
1	000120	C	SFR OCN FT	0	0006	R-1	60.00	150.00	60.00	FF		1.00	1.00	1.00	16,500.00	16,500.00	990,000							

REVIEW DATE 01/19/2024 BY TWA Total Acres: 0.00 Total Land Value: 990,000 Market: 0 Agricultural: 0 Common: 990,000 PRINTED 08/06/2024 BY SYS