LOT 32
LIGHTHOUSE CIRCLE REPLAT
PB 5/4

CRABTREE PHYLLIS L/E/
212 LIGHTHOUSE CIRCLE
FERNANDINA BEACH, FL 32034

2024

00-00-31-1440-0032-0000

NASSAU COUNTY PROPERTY

BUILDING CHARACTERISTICS

ELEMENT	CD	CONSTRUCTION
Exterior Wall	11	BD/BTN AVG 100
Roof Structur	03	GABLE/HIP 100
Roof Cover	03	COMP SHNGL 100
Interior Wall	05	DRYWALL 100
Interior Floo	11	CLAY TILE 100
Air Condition	03	CENTRAL 100
Heating Type	04	AIR DUCTED 100
Bedrooms		3 100
Bathrooms		3.5 100
Frame	02	WOOD FRAME 100
Stories	1.	1. 100
Units		0 100
BUD8 Adjustme	02	DIST FB 100
Occupancy	00	NONE 100
Quality	03	Quality Level 03

DOR CODE	0100	SINGLE FAMILY	
MAP NUM		MKT AREA	01
NEIGHBORHOOD/LOC	1007.00		

AREA TYPE	TOTAL GROSS AREA	PCT OF BASE	TOT ADJ AREA	SUBAREA MARKET VALUE
BAS	1,976	100	1,976	254,963
BAS	88	100	88	11,355
FGR	483	55	266	34,322
FOP	76	30	23	2,968
FOP	33	30	10	1,290
FOP	150	30	45	5,806
FUS	855	100	855	110,321
STR	88	10	9	1,161
UOP	880	20	176	22,709
TOTALS	4,629		3,448	444,895

MARKET ADJUSTMENTS

TYPE	MDL	EFF. AREA	TOT ADJ PTS	EFF. BASE RATE	REPL. COST NEW	AYB	EYB	ECON	FNCT		NORM	% COND
0900	01	3,448	110.4000	138.00	475,824	1966	2010	0	0	0	6.50	93.50

1 SNGL FAM – 100% - 2022 Heated Area: 2919 HX Base Yr 2022

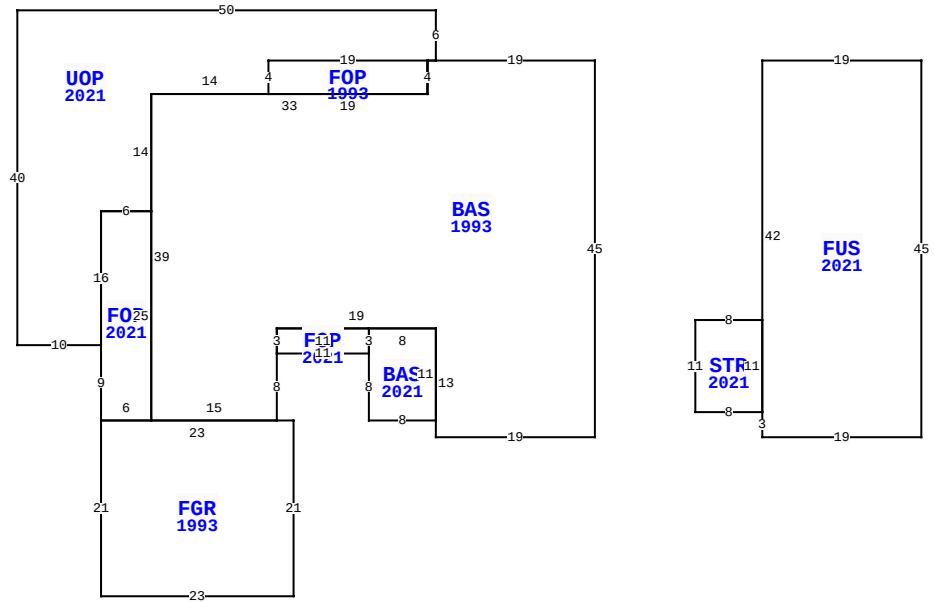

212 LIGHTHOUSE CIR, FERNANDINA BEACH

BLD DATE		LGL DATE	
XF DATE		LAND DATE	
INC DATE		AG DATE	

VALUATION SUMMARY

VALUATION BY		STANDARD
Tax Group: 2	Tax Dist:	
BUILDING MARKET VALUE		444,895
TOTAL MARKET OB/XF VALUE		89,736
TOTAL LAND VALUE - MARKET		275,000
TOTAL MARKET VALUE		809,631
SOH/AGL Deduction		297,370
ASSESSED VALUE		512,261
TOTAL EXEMPTION VALUE	HX HB WX	55,000
BASE TAXABLE VALUE		457,261
TOTAL JUST VALUE		809,631
NCON VALUE		86,412
INCOME VALUE		
PREVIOUS YEAR MKT VALUE		708,611

PERMIT NUM	DESCRIPTION	AMT	ISSUED
2023-0384	POOL SCREEN ENCLO	31,760	07/28/2023
2023-0147	0861-15*32 855-?	92,000	04/17/2023
20222536	XFOB	9,202	10/20/2022
20200350	ADDITION	250,000	07/29/2020
20163305	KIT REM F	35,000	12/05/2016
20111172	REPAIR/RRF	2,000	07/19/2011

SALES DATA

OFF RECORD Number	DATE	TYPE INST	Q U	V I	RSN CD	SALE PRICE
2535/0339	1/10/2022	WD	U	I	11	100
GRANTOR: CRABTREE PHYLLIS						
GRANTEE: CRABTREE PHYLLIS L/						
2519/1845	11/17/2021	WD	U	I	11	100
GRANTOR: FULLER DAVID MARK						
GRANTEE: CRABTREE PHYLLIS						

BUILDING NOTES

EXTRA FEATURES

LN	OB/XF CODE	DESCRIPTION	BLD	CAP	L	W	UNITS	UT	Adj R	ADJ UNIT PRICE	ORIG COND	YEAR ON	YEAR ACTUAL	Q	% COND	OB/XF MKT VALUE	NOTES
1	0504	FP-ELECTRI	0	100	0	0	1.00	UT	2,000.00	2,000.00	100	2021	2021	3	99	1,980	
2	0810	CONCRETE A	0	100	0	0	376.00	SF	6.50	6.50	100	1966	1966	3	20	489	
3	0940	SHEDS/PORT	0	100	8	12	96.00	SF	33.00	33.00	100	2006	2006	3	27	855	
4	0911	SCRN RM A	1	100	35	9	315.00	SF	17.50	17.50	100	2024	2023		100	5,513	
5	0861	POOL GUNIT	0	100	32	15	480.00	SF	85.00	85.00	100	2024	2023		100	40,800	
6	0871	POOL HTR R	0	100	0	0	1.00	UT	2,000.00	2,000.00	100	2024	2023		100	2,000	
7	0911	SCRN RM A	0	100	0	0	1,623.00	SF	17.50	17.50	100	2024	2023		100	28,403	
8	0830	FLAGSTONE	0	100	0	0	808.00	SF	12.00	12.00	100	2024	2023		100	9,696	

BUILDING DIMENSIONS

BAS=[YR=1993;ORIG=0,0] W19 W1 S4 W33 S39 E15 N8 N3 E19 S13 E19 N45 $
UOP=[YR=2021;ORIG=-19,0] N6 W50 S40 E10 N16 E6 N14 E14 E19 N4 E1 $
FUS=[YR=2021;ORIG=20,0] E19 S45 W19 N3 N42 $
FGR=[YR=1993;ORIG=-59,43] S21 E23 N21 W23 $
FOP=[YR=2021;ORIG=-59,34] S9 E6 N25 W6 S16 $
BAS=[YR=2021;ORIG=-27,35] S8 E8 N11 W8 S3 $
STR=[YR=2021;ORIG=20,42] W8 N11 E8 S11 $
FOP=[YR=1993;ORIG=-39,4] N4 E19 S4 W19 $
FOP=[YR=2021;ORIG=-38,35] E11 N3 W11 S3 $
PTR=[ORIG=0,0] E20 W20 $

LAND DESCRIPTION

TOTAL OB/XF 89,736

LN	USE CODE	CLS	LAND USE DESCRIPTION	CAP	RD	LOC ZONE	FRONT	DEPTH	TOT LND UTS	UNIT TYPE	DT	DPTH FACT	% COND	TOT ADJ	UNIT PRICE	ADJ UNIT PRICE	LAND VALUE	OTHER ADJUSTMENTS AND NOTES	YEAR	DENSITY	DECL	FRZ	YR	CONSRV
1	000100	C	SFR	100	0006	R-1	124.00	140.00	1.00	LT		1.00	1.00	1.00	275,000.00	275,000.00	275,000							

REVIEW DATE 01/31/2024 BY TW Total Acres: 0.00 Total Land Value: 275,000 Market: 0 Agricultural: 0 Common: 275,000 PRINTED 08/06/2024 BY SYS