LOTS 27 & 28
IN OR 1895/1642
THE ISLANDS CLUB PB 4/106

CORBETT ERIC T
2674 W 3RD STREET
FERNANDINA BEACH, FL 32034

2024

00-00-31-142A-0027-0000

BUILDING CHARACTERISTICS

ELEMENT	CD	CONSTRUCTION
Exterior Wall	10	ABOVE AVG 70
Exterior Wall	23	REINF CONC 30
Roof Structur	08	IRREGULAR 100
Roof Cover	12	MODULAR MT 100
Interior Wall	05	DRYWALL 100
Interior Floo	12	HARDWOOD 60
Interior Floo	11	CLAY TILE 40
Air Condition	03	CENTRAL 100
Heating Type	04	AIR DUCTED 100
Bedrooms		3 100
Bathrooms		3.5 100
Frame	04	REIN CONC 100
Stories	3.	3. 100
Units		0 100
Quality	05	Quality Level 05

DOR CODE	0100	SINGLE FAMILY	
MAP NUM		MKT AREA	01
NEIGHBORHOOD/LOC	1025.00		

AREA TYPE	TOTAL GROSS AREA	PCT OF BASE	TOT ADJ AREA	SUBAREA MARKET VALUE
BAL	75	15	11	2,458
BAL	120	15	18	4,023
BAS	880	100	880	196,633
FGR	264	55	145	32,400
FOP	56	30	17	3,799
FOP	68	30	20	4,469
FOP	472	30	142	31,729
FST	25	55	14	3,128
FST	25	55	14	3,128
FUS	1,015	100	1,015	226,799
TOTALS	4,591		3,419	763,967

MARKET ADJUSTMENTS

TYPE	MDL	EFF. AREA	TOT ADJ PTS	EFF. BASE RATE	REPL. COST NEW	AYB	EYB	ECON	FNCT		NORM	% COND
0500	11	3,419	153.0218	229.53	784,763	2017	2017	0	0	0	2.65	97.35

1 SFR CUST – 100% - 2018 Heated Area: 3014 HX Base Yr 2018

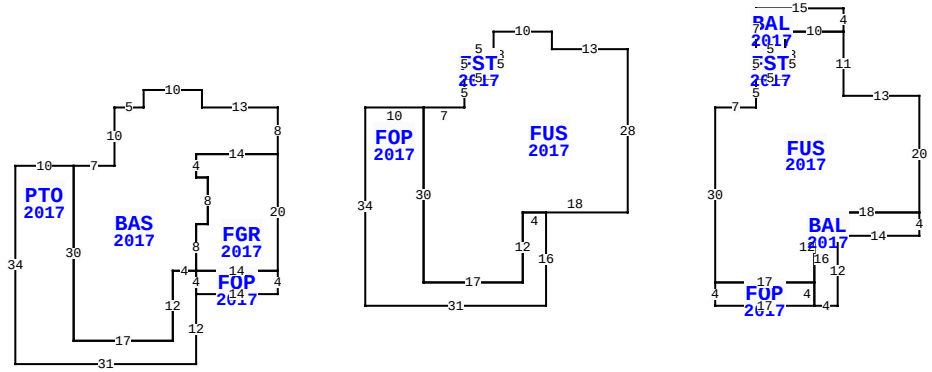

** This building has 12 Sub-Areas

2674 W 3RD ST, FERNANDINA BEACH

BLD DATE		LGL DATE	
XF DATE		LAND DATE	
INC DATE		AG DATE	

NASSAU COUNTY PROPERTY

PAGE 1 of 1 2

VALUATION SUMMARY

VALUATION BY		STANDARD
Tax Group: 2	Tax Dist:	
BUILDING MARKET VALUE		763,967
TOTAL MARKET OB/XF VALUE		53,581
TOTAL LAND VALUE - MARKET		380,000
TOTAL MARKET VALUE		1,197,548
SOH/AGL Deduction		419,720
ASSESSED VALUE		777,828
TOTAL EXEMPTION VALUE	HX HB	50,000
BASE TAXABLE VALUE		727,828
TOTAL JUST VALUE		1,197,548
NCON VALUE		0
INCOME VALUE		
PREVIOUS YEAR MKT VALUE		1,164,277

PERMIT NUM	DESCRIPTION	AMT	ISSUED
20160396	CO ISSUED	0	05/12/2017
20163279	SWIM POOL	37,000	12/01/2016
20160396	NEW CONSTR	432,788	02/15/2016

SALES DATA

OFF RECORD Number	DATE	TYPE INST	Q / U	V / I	RSN CD	SALE PRICE
1895/1642	12/13/2013	WD	Q	V	02	129,000
GRANTOR: COOPER KITTY S						
GRANTEE: CORBETT ERIC T						
1875/1842	8/22/2013	QC	U	V	11	100
GRANTOR: COOPER KITTY S						
GRANTEE: COOPER KITTY S						

BUILDING NOTES

BUILDING DIMENSIONS

BAS=[YR=2017] W13 N3 W10 S3 W5 S10 W7 PTO=[YR=2017] W10 S34 E31 N12 FOP=[YR=2017] E14 N4 FGR=[YR=2017] N20 W14 S4 E2 S8 W2 S8 E14$ W14 S4$ N4 W4 S12 W17 N30$ S30 E17 N12 E4 N8 E2 N8 W2 N4 E14 N8$ PTR=E15 FOP=[YR=2017] E10 FUS=[YR=2017] E7 N5 FST=[YR=2017] N5 E5 S5 W5$ E5 N8 E10 S3 E13 S28 W18 S12 W17 N30$ S30 E17 N12 E4 S16 W31 N34$ W15$ PTR=E75 FUS=[YR=2017] E7 N5 FST=[YR=2017] N5 BAL=[YR=2017] N7 E15 S4 W10 S3 W5$ E5 S5 W5$ E5 N8 E10 S11 E13 S20 BAL=[YR=2017] S4 W14 S12 W4 FOP=[YR=2017] W17 N4 E17 S4$ N16 E18$ W18 S12 W17 N30$ W75$.

EXTRA FEATURES

LN	OB/XF CODE	DESCRIPTION	BLD	CAP	L	W	UNITS	UT	Adj R	ADJ UNIT PRICE	ORIG COND	YEAR ON	YEAR ACTUAL	Q	% COND	OB/XF MKT VALUE	NOTES
1	0811	CONCRETE B	0	100	0	0	1,824.00	SF	5.20	5.20	100	2017	2017	3	97	9,200	
2	0855	CONC PAVER	0	100	0	0	152.00	SF	7.00	7.00	100	2017	2017	3	97	1,032	
3	0861	POOL GUNIT	0	100	0	0	462.00	SF	85.00	85.00	100	2017	2017	3	84	32,987	
4	0855	CONC PAVER	0	100	0	0	658.00	SF	7.00	7.00	100	2017	2017	3	97	4,468	
5	1123	CB 8"	0	100	0	0	988.00	SF	6.15	6.15	100	2017	2017	3	97	5,894	

LAND DESCRIPTION

TOTAL OB/XF 53,581

LN	USE CODE	CLS	LAND USE DESCRIPTION	CAP	RD	LOC ZONE	FRONT	DEPTH	TOT LND UTS	UNIT TYPE	DT	DPTH FACT	% COND	TOT ADJ	UNIT PRICE	ADJ UNIT PRICE	LAND VALUE	OTHER ADJUSTMENTS AND NOTES	YEAR	DENSITY	DECL	FRZ	YR	CONSRV
1	000100	C	SFR	100		R-3	0.00	0.00	2.00	LT		1.00	1.00	1.00	190,000.00	190,000.00	380,000							

REVIEW DATE 03/21/2024 BY KBA Total Acres: 0.00 Total Land Value: 380,000 Market: 0 Agricultural: 0 Common: 380,000 PRINTED 08/06/2024 BY SYS