LOT 4 IN OR 766/472
LIGHTHOUSE CIRCLE SUB
PB 3/49

TAYLOR DONALD W & SUSAN B
207 LIGHTHOUSE CIR
FERNANDINA BEACH, FL 32034

2024

00-00-31-1420-0004-0000

NASSAU COUNTY PROPERTY

BUILDING CHARACTERISTICS

ELEMENT	CD	CONSTRUCTION
Exterior Wall	14	WD SHINGLE 100
Roof Structur	03	GABLE/HIP 100
Roof Cover	11	SLATE 100
Interior Wall	05	DRYWALL 100
Interior Floo	12	HARDWOOD 100
Air Condition	03	CENTRAL 100
Heating Type	04	AIR DUCTED 100
Bedrooms		2 100
Bathrooms		3 100
Frame	02	WOOD FRAME 100
Stories	1.5	1.5 100
Units		0 100
Occupancy	00	NONE 100
Quality	04	Quality Level 04
DOR CODE	0100	SINGLE FAMILY
MAP NUM		MKT AREA 01
NEIGHBORHOOD/LOC	1007.00	

AREA TYPE	TOTAL GROSS AREA	PCT OF BASE	TOT ADJ AREA	SUBAREA MARKET VALUE
BAS	1,502	100	1,502	195,812
FGR	629	55	346	45,107
FOP	78	30	23	2,998
FOP	377	30	113	14,731
FOP	467	30	140	18,251
FSP	307	40	123	16,035
FUS	996	100	996	129,846
PTO	40	5	2	261
PTO	46	5	2	261
UUS	836	50	418	54,494
TOTALS	5,278		3,665	477,796

MARKET ADJUSTMENTS

TYPE	MDL	EFF. AREA	TOT ADJ PTS	EFF. BASE RATE	REPL. COST NEW	AYB	EYB	ECON	FNCT		NORM	% COND
0900	01	3,665	117.1800	146.48	536,849	2001	2001	0	0	0	11.00	89.00

1 SNGL FAM – 100% - 2002 Heated Area: 2498 HX Base Yr 2002

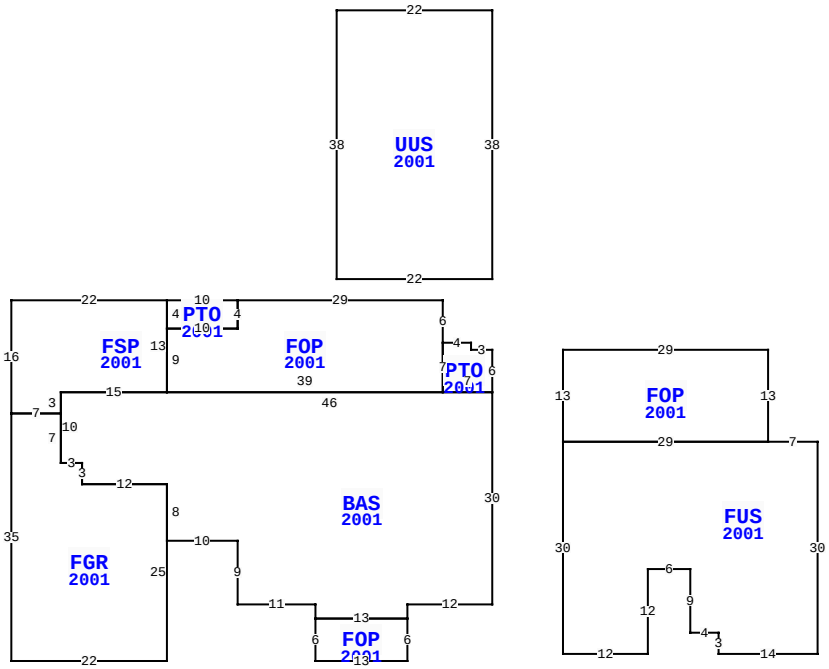

207 LIGHTHOUSE CIR, FERNANDINA BEACH

BLD DATE		LGL DATE	
XF DATE		LAND DATE	03/18/2024 MLU
INC DATE		AG DATE	

VALUATION SUMMARY

VALUATION BY		STANDARD
Tax Group: 2	Tax Dist:	
BUILDING MARKET VALUE		477,796
TOTAL MARKET OB/XF VALUE		14,432
TOTAL LAND VALUE - MARKET		650,000
TOTAL MARKET VALUE		1,142,228
SOH/AGL Deduction		512,597
ASSESSED VALUE		629,631
TOTAL EXEMPTION VALUE	HX HB	50,000
BASE TAXABLE VALUE		579,631
TOTAL JUST VALUE		1,142,228
NCON VALUE		0
INCOME VALUE		
PREVIOUS YEAR MKT VALUE		871,317

PERMIT NUM	DESCRIPTION	AMT	ISSUED
20102096	H/AC	3,800	12/07/2010
2003516	NEW CONSTR	190,000	07/19/2000

SALES DATA

OFF RECORD Number	DATE	TYPE INST	Q / U	V / I	RSN CD	SALE PRICE
0766/0472	7/24/1996	WD	Q	V		110,000
GRANTOR: WEEKS DONALD A						
GRANTEE: TAYLOR DONALD W & S						
0290/0508	5/01/1979	WD	Q	V		22,000
GRANTOR:						
GRANTEE:						

BUILDING NOTES

BUILDING DIMENSIONS

PTO=[YR=2001] W3 N1 W4 FOP=[YR=2001] N6 W29 PTO=[YR=2001] W10 FSP=[YR=2001] W22 S16 FGR=[YR=2001] S35 E22 N25 W12 N3 W3 N7 W7 $ E7 N3 E15 N13 $ S4 E10 N4 $ S4 W10 S9 BAS=[YR=2001] W15 S10 E3 S3 E12 S8 E10 S9 E11 S2 FOP=[YR=2001] S6 E13 N6 W13 $ E13 N2 E12 N30 W46 $ E39 N7 $ S7 E7 N6 $ PTR= E10 FOP=[YR=2001] E29 S13 FUS=[YR=2001] E7 S30 W14 N3 W4 N9 W6 S12 W12 N30 E29 $ W29 N13 $ W10 $ PTR= N10 UUS=[YR=2001] N38 W22 S38 E22 $ S10 $.

EXTRA FEATURES

LN	OB/XF CODE	DESCRIPTION	BLD	CAP	L	W	UNITS	UT	Adj R	ADJ UNIT PRICE	ORIG COND	YEAR ON	YEAR ACTUAL	Q	% COND	OB/XF MKT VALUE	NOTES
1	0300	BOAT DCK W	0	100	151	4	604.00	SF	40.00	40.00	100	1995	1995	3	23	5,557	
2	0311	WD GANG WY	0	100	0	0	20.00	SF	45.00	45.00	100	1995	1995	3	20	180	
3	0303	FLT DOCK W	0	100	20	10	200.00	SF	26.00	26.00	100	1995	1995	3	23	1,196	
4	0317	DCK PLNG W	0	100	0	0	2.00	UT	1,000.00	1,000.00	100	1995	1995	3	20	400	
5	0504	FP-ELECTRI	0	100	0	0	1.00	UT	2,000.00	2,000.00	100	2001	2001	3	85	1,700	
6	0819	CONC 12"	0	100	2	6	12.00	SF	9.50	9.50	100	2001	2001	3	80	91	
7	0810	CONCRETE A	0	100	16	4	64.00	SF	6.50	6.50	100	2001	2001	3	80	333	
8	0810	CONCRETE A	0	100	42	3	126.00	SF	6.50	6.50	100	2001	2001	3	80	655	
9	0810	CONCRETE A	0	100	48	16	768.00	SF	6.50	6.50	100	2001	2001	3	80	3,994	
10	0851	PATIO STON	0	100	22	10	220.00	SF	1.50	1.50	100	2001	2001	3	80	264	

TOTAL OB/XF 14,370

LAND DESCRIPTION

LN	USE CODE	CLS	LAND USE DESCRIPTION	CAP	RD	LOC ZONE	FRONT	DEPTH	TOT LND UTS	UNIT TYPE	DT	DPTH FACT	% COND	TOT ADJ	UNIT PRICE	ADJ UNIT PRICE	LAND VALUE	OTHER ADJUSTMENTS AND NOTES	YEAR	DENSITY	DECL	FRZ	YR	CONSRV
1	000130	C	SFR WATER	100		R-1	100.00	284.00	100.00	FF		1.00	1.00	1.00	6,500.00	6,500.00	650,000							

REVIEW DATE 05/12/2019 BY KBA Total Acres: 0.00 Total Land Value: 650,000 Market: 0 Agricultural: 0 Common: 650,000 PRINTED 08/06/2024 BY SYS

LOT 4 IN OR 766/472
LIGHTHOUSE CIRCLE SUB
PB 3/49

TAYLOR DONALD W & SUSAN B
207 LIGHTHOUSE CIR
FERNANDINA BEACH, FL 32034

2024

00-00-31-1420-0004-0000

NASSAU COUNTY PROPERTY

BUILDING CHARACTERISTICS

ELEMENT	CD	CONSTRUCTION

DOR CODE	0100	SINGLE FAMILY	
MAP NUM		MKT AREA	01
NEIGHBORHOOD/LOC	1007.00		

AREA TYPE	TOTAL GROSS AREA	PCT OF BASE	TOT ADJ AREA	SUBAREA MARKET VALUE
TOTALS				

MARKET ADJUSTMENTS

TYPE	MDL	EFF. AREA	TOT ADJ PTS	EFF. BASE RATE	REPL. COST NEW	AYB	EYB	ECON	FNCT		NORM	% COND

BLD DATE		LGL DATE	03/18/2024 MLU
XF DATE		LAND DATE	
INC DATE		AG DATE	

VALUATION SUMMARY

VALUATION BY		STANDARD
Tax Group: 2	Tax Dist:	
BUILDING MARKET VALUE		477,796
TOTAL MARKET OB/XF VALUE		14,432
TOTAL LAND VALUE - MARKET		650,000
TOTAL MARKET VALUE		1,142,228
SOH/AGL Deduction		512,597
ASSESSED VALUE		629,631
TOTAL EXEMPTION VALUE	HX HB	50,000
BASE TAXABLE VALUE		579,631
TOTAL JUST VALUE		1,142,228
NCON VALUE		0
INCOME VALUE		
PREVIOUS YEAR MKT VALUE		871,317

PERMIT NUM	DESCRIPTION	AMT	ISSUED

SALES DATA

OFF RECORD Number	DATE	TYPE INST	Q / U	V / I	RSN CD	SALE PRICE
0766/0472	7/24/1996	WD	Q	V		110,000
GRANTOR: WEEKS DONALD A						
GRANTEE: TAYLOR DONALD W & S						
0290/0508	5/01/1979	WD	Q	V		22,000
GRANTOR:						
GRANTEE:						

BUILDING NOTES

BUILDING DIMENSIONS

EXTRA FEATURES

LN	OB/XF CODE	DESCRIPTION	BLD	CAP	L	W	UNITS	UT	Adj R	ADJ UNIT PRICE	ORIG COND	YEAR ON	YEAR ACTUAL	Q	% COND	OB/XF MKT VALUE	NOTES
11	0851	PATIO STON	0	100	0	0	52.00	SF	1.50	1.50	100	2001	2001	3	80	62	

LAND DESCRIPTION

TOTAL OB/XF 62

LN	USE CODE	CLS	LAND USE DESCRIPTION	CAP	RD	LOC ZONE	FRONT	DEPTH	TOT LND UTS	UNIT TYPE	DT	DPTH FACT	% COND	TOT ADJ	UNIT PRICE	ADJ UNIT PRICE	LAND VALUE	OTHER ADJUSTMENTS AND NOTES	YEAR	DENSITY	DECL	FRZ	YR	CONSRV

REVIEW DATE 05/12/2019 BY KBA Total Acres: 0.00 Total Land Value: 650,000 Market: 0 Agricultural: 0 Common: 650,000 PRINTED 08/06/2024 BY SYS