BLOCK 5 LOT 7
IN OR 832/1989
INTERLACHEN-BY-THE-SEA PB 5/21

LANGLEY SHIRLEY
787 VINING ESTATE DR
MABLETON, GA 30126

2024

00-00-31-1400-0005-0070

NASSAU COUNTY PROPERTY

BUILDING CHARACTERISTICS

ELEMENT	CD	CONSTRUCTION
Exterior Wall	10	ABOVE AVG 100
Roof Structur	08	IRREGULAR 100
Roof Cover	11	SLATE 100
Interior Wall	05	DRYWALL 80
Interior Wall	06	CUST PANEL 20
Interior Floo	19	MARBLE 80
Interior Floo	14	CARPET 20
Air Condition	03	CENTRAL 100
Heating Type	04	AIR DUCTED 100
Bedrooms		4 100
Bathrooms		4.5 100
Frame	07	SPECIAL 100
Stories	2.5	2.5 100
Units		0 100
Occupancy	00	NONE 100
Quality	05	Quality Level 05
DOR CODE	0100	SINGLE FAMILY
MAP NUM		MKT AREA 01
NEIGHBORHOOD/LOC	1050.00	

AREA TYPE	TOTAL GROSS AREA	PCT OF BASE	TOT ADJ AREA	SUBAREA MARKET VALUE
BAS	240	100	240	51,508
DCK	287	10	29	6,224
FCP	864	25	216	46,357
FOP	21	30	6	1,288
FOP	60	30	18	3,863
FOP	80	30	24	5,150
FOP	210	30	63	13,521
FOP	238	30	71	15,238
FST	288	55	158	33,910
FUS	1,112	100	1,112	238,653
TOTALS	5,462		3,786	812,536

MARKET ADJUSTMENTS

TYPE	MDL	EFF. AREA	TOT ADJ PTS	EFF. BASE RATE	REPL. COST NEW	AYB	EYB	ECON	FNCT		NORM	% COND
0500	01	3,786	153.8460	230.77	873,695	2008	2008	0	0	0	7.00	93.00

1 SFR CUST – 0% - 0 Heated Area: 3057 HX Base Yr

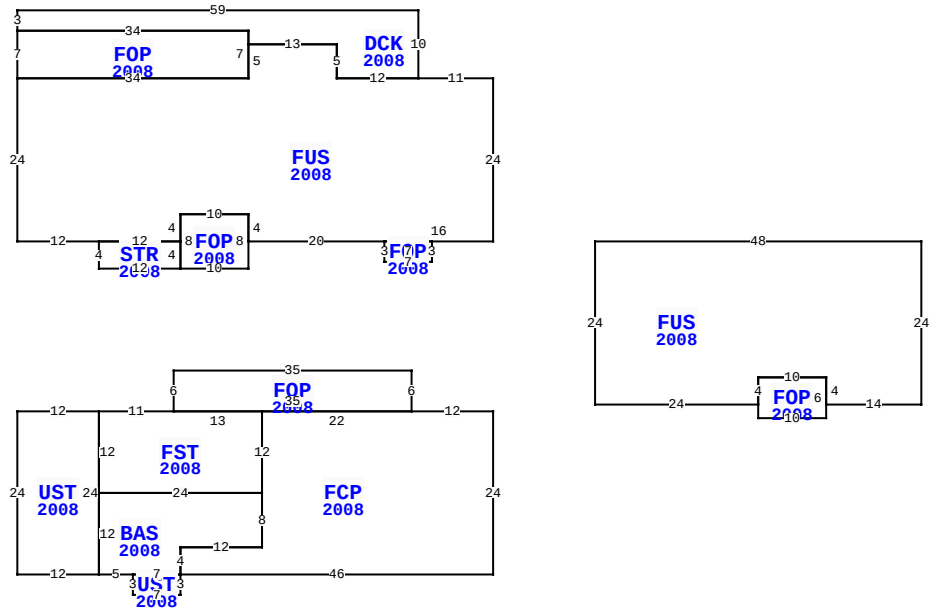

** This building has 14 Sub-Areas

1346 N FLETCHER AVE, FERNANDINA BEACH

BLD DATE	03/27/2014 KK	LGL DATE	
XF DATE		LAND DATE	
INC DATE		AG DATE	

VALUATION SUMMARY

VALUATION BY	STANDARD
Tax Group: 2	Tax Dist:
BUILDING MARKET VALUE	812,536
TOTAL MARKET OB/XF VALUE	36,159
TOTAL LAND VALUE - MARKET	1,600,000
TOTAL MARKET VALUE	2,448,695
SOH/AGL Deduction	823,469
ASSESSED VALUE	1,625,226
TOTAL EXEMPTION VALUE	0
BASE TAXABLE VALUE	1,625,226
TOTAL JUST VALUE	2,448,695
NCON VALUE	0
INCOME VALUE	
PREVIOUS YEAR MKT VALUE	2,212,887

PERMIT NUM	DESCRIPTION	AMT	ISSUED
20080577	OTHER	2,500	04/11/2008
20072129	GAS	200	11/28/2007
20072018	H/AC	12,500	10/26/2007
20071889	NEW CONSTR	20,000	10/10/2007
20071448	NEW CONSTR	40,000	08/06/2007
20071026	CO ISSUED	700,000	06/07/2007

SALES DATA

OFF RECORD Number	DATE	TYPE INST	Q U /	V I /	RSN CD	SALE PRICE
0832/1989	5/07/1998	WD	Q	V		250,000
GRANTOR: HOLCOMB JAMES M & JO						
GRANTEE: LANGLEY SHIRLEY						
0219/0598	6/01/1976	WD	Q	V		7,800
GRANTOR:						
GRANTEE:						

BUILDING NOTES

BUILDING DIMENSIONS

FCP=[YR=2008] W12 FOP=[YR=2008] N6W35S6 FST=[YR=2008] W11
UST=[YR=2008] W12 S24E12 N24$ S12E24N12W13$ E35$W22S12
BAS=[YR=2008] W24S12E5 UST=[YR=2008] S3E7 N3W7$
E7N4E12N8$S8W12S4E46N24$ PTR=N25 FUS=[YR=2008] N24W11
DCK=[YR=2008] N10W59S3 FOP=[YR=2008] S7E34 N7W34$
E34S2E13S5E12$ W12N5W13 S5W34S24E12 STR=[YR=2008] S4E12
FOP=[YR=2008] E10N8W10S8$N4W12$ E12 N4E10S4E20 FOP=[YR=2008]
S3E7N3W7$ E16$ S25$ PTR=N25E15 FUS=[YR=2008]
S24E24FOP=[YR=2008] S2E10N6W10S4$ N4 E10S4E14N24W48$ W15S25$.

EXTRA FEATURES

LN	OB/XF CODE	DESCRIPTION	BLD	CAP	L	W	UNITS	UT	Adj R	ADJ UNIT PRICE	ORIG COND	YEAR ON	YEAR ACTUAL	Q	% COND	OB/XF MKT VALUE	NOTES
1	0409	ELEVATOR R	0	0	0	0	1.00	UT	14,280.00	14,280.00	100	2008	2008	3	100	14,280	
2	1100	VAC SYSTEM	0	0	0	0	1.00	UT	1,280.00	1,280.00	100	2008	2008	3	35	448	
3	0500	FP-PRE FAB	0	0	0	0	1.00	UT	3,500.00	3,500.00	100	2008	2008	3	92	3,220	
4	0416	DUNEWALKS	0	0	89	4	356.00	SF	22.50	22.50	100	2008	2008	3	35	2,804	
5	0810	CONCRETE A	0	0	43	4	172.00	SF	9.10	9.10	100	2008	2008	3	89	1,393	
6	0810	CONCRETE A	0	0	57	34	1,938.00	SF	8.13	8.13	100	2008	2008	3	89	14,014	

LAND DESCRIPTION

TOTAL OB/XF 36,159

LN	USE CODE	CLS	LAND USE DESCRIPTION	CAP	RD	LOC ZONE	FRONT	DEPTH	TOT LND UTS	UNIT TYPE	DT	DPTH FACT	% COND	TOT ADJ	UNIT PRICE	ADJ UNIT PRICE	LAND VALUE	OTHER ADJUSTMENTS AND NOTES	YEAR	DENSITY	DECL	FRZ	YR	CONSRV
1	000120	C	SFR OCN FT	0	0006	R-1	100.00	100.00	100.00	FF		1.00	1.00	1.00	16,000.00	16,000.00	1,600,000							

REVIEW DATE 01/14/2021 BY TWA Total Acres: 0.00 Total Land Value: 1,600,000 Market: 0 Agricultural: 0 Common: 1,600,000 PRINTED 08/06/2024 BY SYS