BLOCK 5 LOT 6
IN OR 1711/625
INTERLACHEN-BY-THE-SEA PB 5/21

1340 LLC
5161 FIRST COAST HWY
AMELIA ISLAND, FL 32034

2024

00-00-31-1400-0005-0060

NASSAU COUNTY PROPERTY

BUILDING CHARACTERISTICS

ELEMENT	CD	CONSTRUCTION
Exterior Wall	11	BD/BTN AVG 100
Roof Structur	03	GABLE/HIP 100
Roof Cover	03	COMP SHNGL 100
Interior Wall	05	DRYWALL 100
Interior Floo	11	CLAY TILE 60
Interior Floo	14	CARPET 40
Air Condition	03	CENTRAL 100
Heating Type	04	AIR DUCTED 100
Bedrooms		3 100
Bathrooms		2 100
Frame	07	SPECIAL 100
Stories	1.5	1.5 100
Units		0 100
BUD8 Adjustme	02	DIST FB 100
Occupancy	00	NONE 100
Quality	03	Quality Level 03
DOR CODE	0100	SINGLE FAMILY
MAP NUM		MKT AREA 01
NEIGHBORHOOD/LOC	1050.00	

AREA TYPE	TOTAL GROSS AREA	PCT OF BASE	TOT ADJ AREA	SUBAREA MARKET VALUE
BAL	48	15	7	904
BAL	694	15	104	13,425
BAS	1,528	100	1,528	197,253
FCP	552	25	138	17,815
FOP	10	30	3	388
STR	40	10	4	516
STR	90	10	9	1,162
UST	343	45	154	19,880
TOTALS	3,305		1,947	251,343

MARKET ADJUSTMENTS

TYPE	MDL	EFF. AREA	TOT ADJ PTS	EFF. BASE RATE	REPL. COST NEW	AYB	EYB	ECON	FNCT		NORM	% COND
0900	01	1,947	113.4840	141.86	276,201	1977	2005	0	0	0	9.00	91.00

1 SNGL FAM – 0% - 0 Heated Area: 1528 HX Base Yr

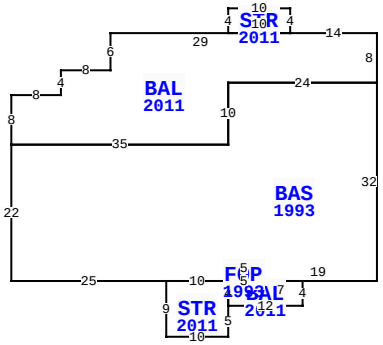

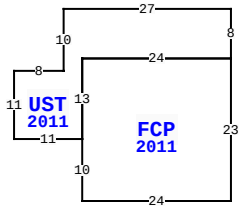

1340 N FLETCHER AVE, FERNANDINA BEACH

BLD DATE		LGL DATE	
XF DATE		LAND DATE	
INC DATE		AG DATE	

NASSAU COUNTY PROPERTY — VALUATION SUMMARY

VALUATION BY	STANDARD
Tax Group: 2	Tax Dist:
BUILDING MARKET VALUE	251,343
TOTAL MARKET OB/XF VALUE	6,952
TOTAL LAND VALUE - MARKET	1,600,000
TOTAL MARKET VALUE	1,858,295
SOH/AGL Deduction	713,616
ASSESSED VALUE	1,144,679
TOTAL EXEMPTION VALUE	0
BASE TAXABLE VALUE	1,144,679
TOTAL JUST VALUE	1,858,295
NCON VALUE	0
INCOME VALUE	
PREVIOUS YEAR MKT VALUE	1,647,531

PERMIT NUM	DESCRIPTION	AMT	ISSUED
2023-0118	DRIVE PAVE		04/04/2024
20112163	ELEC OTHER	950	12/05/2011
20112088	REPAIR/RRF	1,980	11/18/2011
20112048	H/AC	8,550	11/15/2011
20110067	REMODEL	35,000	01/10/2011
20070339	REPAIR/RRF	9,900	02/22/2007

SALES DATA

OFF RECORD Number	DATE	TYPE INST	Q / U	V / I	RSN CD	SALE PRICE
1711/0625	11/23/2010	WD	Q	I	02	645,000
GRANTOR: WILLIAM HAROLD E & MA						
GRANTEE: 1340 LLC						
1188/1068	11/14/2003	QC	U	I	06	100
GRANTOR: WILLIAMS HAROLD E & M						
GRANTEE: WILLIAMS HAROLD & M						

BUILDING NOTES

BUILDING DIMENSIONS

BAL=[YR=2011] W14 STR=[YR=2011] N4W10 S4 E10$W29 S6 W8S4 W8S8 BAS=[YR=1993] S22 E25 STR=[YR=2011] S9E10N5 BAL=[YR=2011] E12N4 W7 FOP=[YR=1993] N2W5 S2E5$ W5 S4$ N4W10$ E10N2E5S2 E19N 32 W24 S10W35$ E35N10E24 N8$ PTR= S70 UST=[YR=2011] W27S10W8 S11E11 FCP=[YR=2011] S10E24N23W24S13 $ N13 E24N8$ N70$.

EXTRA FEATURES

LN	OB/XF CODE	DESCRIPTION	BLD	CAP	L	W	UNITS	UT	Adj R	ADJ UNIT PRICE	ORIG COND	YEAR ON	YEAR ACTUAL	Q	% COND	OB/XF MKT VALUE	NOTES
1	0810	CONCRETE A	0	0	56	24	1,344.00	SF	6.50	6.50	100	1980	1980	3	32.5	2,839	
2	0416	DUNEWALKS	0	0	42	9	378.00	SF	15.00	15.00	100	2011	2011	3	50	2,835	
3	0820	WOOD WALK	0	0	0	0	272.00	SF	11.75	11.75	100	1984	1984	3	40	1,278	

LAND DESCRIPTION

TOTAL OB/XF 6,952

LN	USE CODE	CLS	LAND USE DESCRIPTION	CAP	RD	LOC ZONE	FRONT	DEPTH	TOT LND UTS	UNIT TYPE	DT	DPTH FACT	% COND	TOT ADJ	UNIT PRICE	ADJ UNIT PRICE	LAND VALUE	OTHER ADJUSTMENTS AND NOTES	YEAR	DENSITY	DECL	FRZ	YR	CONSRV
1	000120	C	SFR OCN FT	0	0006	R-1	100.00	115.00	100.00	FF		1.00	1.00	1.00	16,000.00	16,000.00	1,600,000							

REVIEW DATE 07/15/2024 BY DJX Total Acres: 0.00 Total Land Value: 1,600,000 Market: 0 Agricultural: 0 Common: 1,600,000 PRINTED 08/06/2024 BY SYS