LOT 2
HIGHLAND HILLS PB 6/231

NORWOOD CHARLES J & LAURIE P REVOC TRUST/NORWOOD C
591 AMELIA CIRCLE
FERNANDINA BEACH, FL 32034

2024

00-00-31-1383-0002-0000

NASSAU COUNTY PROPERTY

BUILDING CHARACTERISTICS

ELEMENT	CD	CONSTRUCTION
Exterior Wall	17	CB STUCCO 100
Roof Structur	03	GABLE/HIP 100
Roof Cover	03	COMP SHNGL 100
Interior Wall	05	DRYWALL 100
Interior Floo	11	CLAY TILE 100
Air Condition	03	CENTRAL 100
Heating Type	04	AIR DUCTED 100
Bedrooms		3 100
Bathrooms		4 100
Frame	04	REIN CONC 100
Stories	2.	2. 100
Units		0 100
Quality	03	Quality Level 03

DOR CODE 0100 SINGLE FAMILY
MAP NUM | MKT AREA 01
NEIGHBORHOOD/LOC 1007.00

AREA TYPE	TOTAL GROSS AREA	PCT OF BASE	TOT ADJ AREA	SUBAREA MARKET VALUE
BAS	1,512	100	1,512	294,286
DCK	187	10	19	3,698
FCP	208	25	52	10,121
FGR	917	55	504	98,095
FOP	208	30	62	12,067
FUS	2,429	100	2,429	472,766
STR	144	10	14	2,724
TOTALS	5,605		4,592	893,759

MARKET ADJUSTMENTS

TYPE	MDL	EFF. AREA	TOT ADJ PTS	EFF. BASE RATE	REPL. COST NEW	AYB	EYB	ECON	FNCT		NORM	% COND
0500	11	4,592	131.0640	196.60	902,787	2021	2021	0	0	0	1.00	99.00

1 SFR CUST – 100% - 2022 Heated Area: 3941 HX Base Yr 2022

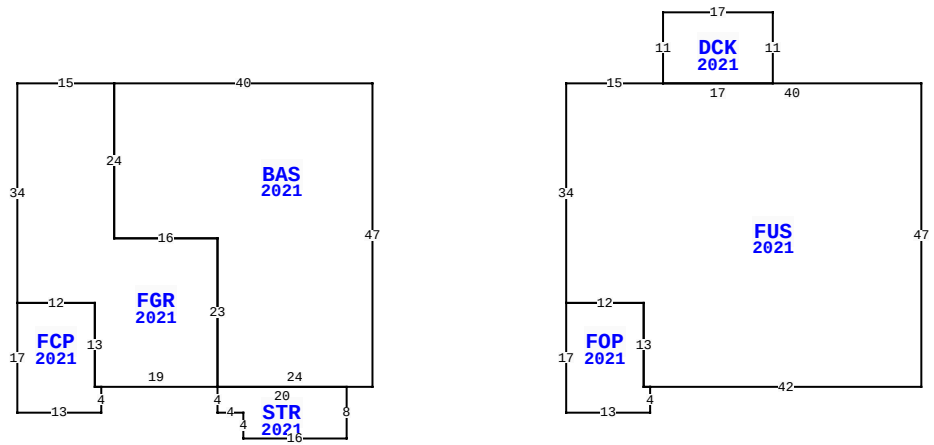

591 AMELIA CIR, FERNANDINA BEACH

BLD DATE		LGL DATE	
XF DATE		LAND DATE	
INC DATE		AG DATE	

VALUATION SUMMARY

VALUATION BY		STANDARD
Tax Group: 2	Tax Dist:	
BUILDING MARKET VALUE		893,759
TOTAL MARKET OB/XF VALUE		8,211
TOTAL LAND VALUE - MARKET		225,000
TOTAL MARKET VALUE		1,126,970
SOH/AGL Deduction		136,508
ASSESSED VALUE		990,462
TOTAL EXEMPTION VALUE	HX HB VX	55,000
BASE TAXABLE VALUE		935,462
TOTAL JUST VALUE		1,126,970
NCON VALUE		0
INCOME VALUE		
PREVIOUS YEAR MKT VALUE		1,086,654

PERMIT NUM	DESCRIPTION	AMT	ISSUED
20200016	CO ISSUED	0	04/01/2021
20200016	NEW CONSTR	0	02/17/2020
20052558	DEMOLITION	2,000	08/29/2005

SALES DATA

OFF RECORD Number	DATE	TYPE INST	Q / U	V / I	RSN CD	SALE PRICE
2317/0060	11/04/2019	WD	U	V	11	100
GRANTOR: NORWOOD CHARLES J & L						
GRANTEE: NORWOOD CHARLES J &						
2284/0797	6/14/2019	WD	U	V	11	100
GRANTOR: NORWOOD CHARLES J & L						
GRANTEE: CHARLES & LAURIE NO						

BUILDING NOTES

BUILDING DIMENSIONS

BAS=[YR=2021] W40 FGR=[YR=2021] W15 S34 FCP=[YR=2021] S17 E13 N4 W1 N13 W12 $ E12 S13 E19 N23 W16 N24 $ S24 E 16 S23 STR=[YR=2021] S4 E4 S4 E16 N8 W20 $ E24 N47 $ PTR= E30 FUS=[YR=2021] E15 DCK=[YR=2021] N11 E17 S11 W17 $ E40 S47 W42 FOP=[YR=2021] S4 W13 N17 E12 S13 E1 $ W1 N13 W12 N34 $ W30 $.

EXTRA FEATURES

LN	OB/XF CODE	DESCRIPTION	BLD	CAP	L	W	UNITS	UT	Adj R	ADJ UNIT PRICE	ORIG COND	YEAR ON	YEAR ACTUAL	Q	% COND	OB/XF MKT VALUE	NOTES
1	0810	CONCRETE A	0	100	0	0	1,276.00	SF	6.50	6.50	100	2021	2021	3	99	8,211	

LAND DESCRIPTION

TOTAL OB/XF 8,211

LN	USE CODE	CLS	LAND USE DESCRIPTION	CAP	RD	LOC ZONE	FRONT	DEPTH	TOT LND UTS	UNIT TYPE	DT	DPTH FACT	% COND	TOT ADJ	UNIT PRICE	ADJ UNIT PRICE	LAND VALUE	OTHER ADJUSTMENTS AND NOTES	YEAR	DENSITY	DECL	FRZ	YR	CONSRV
1	000100	C	SFR	100	0003	R-1	0.00	0.00	1.00	LT		1.00	1.00	1.00	225,000.00	225,000.00	225,000							

REVIEW DATE 02/11/2021 BY RK Total Acres: 0.00 Total Land Value: 225,000 Market: 0 Agricultural: 0 Common: 225,000 PRINTED 08/06/2024 BY SYS