LOT 41
IN OR 1813/1907
HIGHLAND DUNES PB 7/311

GARBER JOSEPH Q & KRISTI D
1618 HIGHLAND DUNES WY
FERNANDINA BEACH, FL 32034

2024

00-00-31-1375-0041-0000

BUILDING CHARACTERISTICS

ELEMENT	CD	CONSTRUCTION
Exterior Wall	10	ABOVE AVG 100
Roof Structur	08	IRREGULAR 100
Roof Cover	03	COMP SHNGL 100
Interior Wall	05	DRYWALL 100
Interior Floo	15	HARDTILE 60
Interior Floo	14	CARPET 40
Air Condition	03	CENTRAL 100
Heating Type	04	AIR DUCTED 100
Bedrooms		4 100
Bathrooms		2 100
Frame	02	WOOD FRAME 100
Stories	1.	1. 100
Units		0 100
Occupancy	00	NONE 100
Quality	04	Quality Level 04
DOR CODE	0100	SINGLE FAMILY
MAP NUM		MKT AREA 01
NEIGHBORHOOD/LOC	1104.00	

AREA TYPE	TOTAL GROSS AREA	PCT OF BASE	TOT ADJ AREA	SUBAREA MARKET VALUE
BAS	2,002	100	2,002	345,804
FGR	528	55	290	50,092
FOP	102	30	31	5,354
FOP	160	30	48	8,291
PTO	204	5	10	1,727
UAT	210	10	21	3,627
TOTALS	3,206		2,402	414,895

MARKET ADJUSTMENTS

TYPE	MDL	EFF. AREA	TOT ADJ PTS	EFF. BASE RATE	REPL. COST NEW	AYB	EYB	ECON	FNCT		NORM	% COND
0500	01	2,402	121.2162	181.82	436,732	2012	2012	0	0	0	5.00	95.00

1 SFR CUST – 100% - 2013 Heated Area: 2002 HX Base Yr 2013

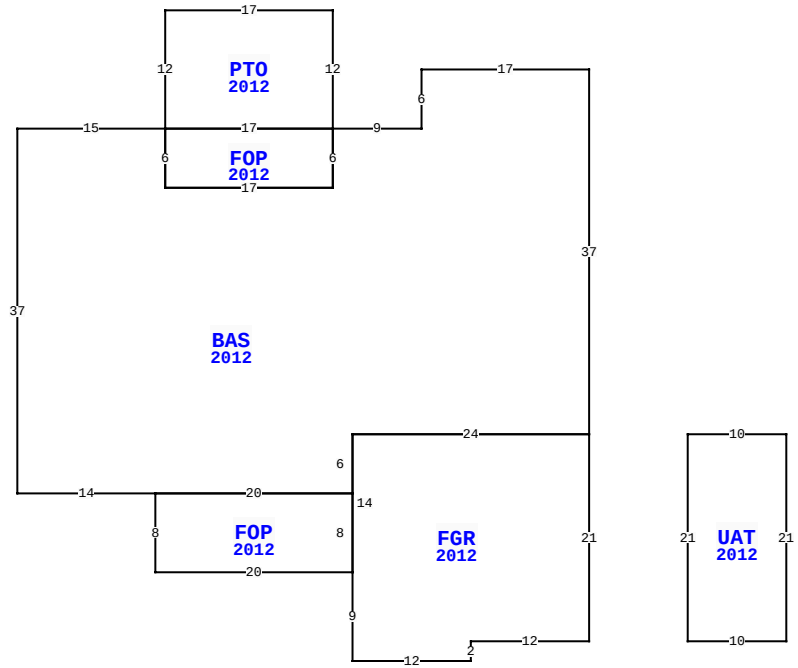

1618 HIGHLAND DUNES WAY, FERNANDINA BEACH

BLD DATE		LGL DATE	
XF DATE		LAND DATE	
INC DATE		AG DATE	

NASSAU COUNTY PROPERTY

PAGE 1 of 1 2

VALUATION SUMMARY

VALUATION BY		STANDARD
Tax Group: 2	Tax Dist:	
BUILDING MARKET VALUE		414,895
TOTAL MARKET OB/XF VALUE		46,362
TOTAL LAND VALUE - MARKET		200,000
TOTAL MARKET VALUE		661,257
SOH/AGL Deduction		357,309
ASSESSED VALUE		303,948
TOTAL EXEMPTION VALUE	HX HB	50,000
BASE TAXABLE VALUE		253,948
TOTAL JUST VALUE		661,257
NCON VALUE		0
INCOME VALUE		
PREVIOUS YEAR MKT VALUE		645,965

PERMIT NUM	DESCRIPTION	AMT	ISSUED
20120527	VINYL FENCE	0	03/29/2012
20120392	SCREEN ROOM	2,663	03/12/2012
20112239	NEW CONSTR	229,971	12/19/2011

SALES DATA

OFF RECORD Number	DATE	TYPE INST	Q U	V I	RSN CD	SALE PRICE
1813/1907	9/13/2012	WD	Q	I	02	335,000
GRANTOR: KOSTICH DEVELOPMENT I						
GRANTEE: GARBER JOSEPH Q & K						
1770/0711	12/15/2011	WD	Q	V	01	77,000
GRANTOR: HIGHLAND 35 LLC						
GRANTEE: KOSTICH DEVELOPMENT						

BUILDING NOTES

BUILDING DIMENSIONS

BAS=[YR=2012] W17S6W9 PTO=[YR=2012] N12W17 S12 FOP=[YR=2012] S6E17N6W17$ E17$ S6W17N6W15 S37E14 FOP=[YR=2012] S8 E20 FGR=[YR=2012] S9E12N2 E12N21W24 S14$ N8W20$ E20N6E24N37$ PTR= S37E10 UAT=[YR=2012] S21E10N21W10$ W10N37$.

EXTRA FEATURES

LN	OB/XF CODE	DESCRIPTION	BLD	CAP	L	W	UNITS	UT	Adj R	ADJ UNIT PRICE	ORIG COND	YEAR ON	YEAR ACTUAL	Q	% COND	OB/XF MKT VALUE	NOTES
1	0920	CWALL-WD/M	0	100	0	0	157.00	LF	390.00	390.00	100	2012	2012	3	55	33,677	
2	0855	CONC PAVER	0	100	30	5	150.00	SF	7.00	7.00	100	2012	2012	3	93	977	
3	0855	CONC PAVER	0	100	43	24	1,032.00	SF	7.00	7.00	100	2012	2012	3	93	6,718	
4	0910	SCRN RM L	0	100	12	17	204.00	SF	15.00	15.00	100	2012	2012	3	55	1,683	
5	0476	VF 6 SBPL	0	100	0	0	107.00	LF	32.00	32.00	100	2012	2012	3	83	2,842	
6	0476	VF 6 SBPL	0	100	0	0	35.00	LF	16.00	16.00	100	2012	2012	3	83	465	

LAND DESCRIPTION

TOTAL OB/XF 46,362

LN	USE CODE	CLS	LAND USE DESCRIPTION	CAP	RD	LOC ZONE	FRONT	DEPTH	TOT LND UTS	UNIT TYPE	DT	DPTH FACT	% COND	TOT ADJ	UNIT PRICE	ADJ UNIT PRICE	LAND VALUE	OTHER ADJUSTMENTS AND NOTES	YEAR	DENSITY	DECL	FRZ	YR	CONSRV
1	000100	C	SFR	100	0003	R-1	0.00	0.00	1.00	LT		1.00	1.00	1.00	200,000.00	200,000.00	200,000							

REVIEW DATE 05/12/2019 BY KBA Total Acres: 0.00 Total Land Value: 200,000 Market: 0 Agricultural: 0 Common: 200,000 PRINTED 08/06/2024 BY SYS